APPENDIX C

STORMWATER MANAGEMENT DESIGN CRITERIA

TABLE C-1

RUNOFF CURVE NUMBERS

LAND USE DESCRIPTION	Hydrologic Condition	HYDROLOGIC SOIL GROUP A	B	C	D
Open Space					
Grass cover < 50%	Poor	68	79	86	89
Grass cover 50% to 75%	Fair	49	69	79	84
Grass cover > 75%	Good	39	61	74	80
Meadow		30	58	71	78
Agricultural					
Pasture, grassland, or range – Continuous forage for grazing	Poor	68	79	86	89
Pasture, grassland, or range – Continuous forage for grazing	Fair	49	69	79	84
Pasture, grassland, or range – Continuous forage for grazing	Good	39	61	74	80
Brush—brush-weed-grass mixture with brush the major element	Poor	48	67	77	83
Brush—brush-weed-grass mixture with brush the major element	Fair	35	56	70	77
Brush—brush-weed-grass mixture with brush the major element	Good	30	48	65	73
Fallow Bare soil -------		77	86	91	94
Crop residue cover (CR)	Poor	76	85	90	93
	Good	74	83	88	90
Woodlands – grass combination (orchard or tree farm)	Poor	57	73	82	86
	Fair	43	65	76	82
	Good	32	58	72	79

Woodlands	Poor	45	66	77	83
	Fair	36	60	73	79
	Good	30	55	70	77
Commercial (85% impervious)		89	92	94	95
Industrial (72% impervious)		81	88	91	93
Institutional (50% impervious)		71	82	88	90

Residential districts by average lot size:	% Impervious				
1/8 acre or less * (townhouses)	65	77	85	90	92
1/4 acre	38	61	75	83	87
1/3 acre	30	57	72	81	86
1/2 acre	25	54	70	80	85
1 acre	20	51	68	79	84
2 acres	12	46	65	77	82
Farmstead	59	74	82	86	
Smooth surfaces (concrete, asphalt, gravel, or bare compacted soil)	98	98	98	98	
Water	98	98	98	98	
Mining/newly graded areas (pervious areas only)	77	86	91	94	

* Includes multi-family housing unless justified lower density can be provided.

Note: Existing site conditions of bare earth or fallow ground shall be considered as meadow when choosing a CN value.

Source: NRCS (SCS) TR-55

TABLE C-2

RATIONAL RUNOFF COEFFICIENTS

	HYDROLOGIC SOIL GROUP			
LAND USE DESCRIPTION	A	B	C	D
Cultivated land : without conservation treatment	.49	.67	.81	.88
: with conservation treatment	.27	.43	.61	.67
Pasture or range land: poor condition	.38	.63	.78	.84
: good condition	---*	.25	.51	.65
Meadow: good condition	---*	---*	.44	.61
Woodlands: thin stand, poor cover, no mulch	---*	.34	.59	.70
: good cover	---*	---*	.45	.59
Open spaces, lawns, parks, golf courses, cemeteries				
Good condition: grass cover on 75% or more of the area	---*	.25	.51	.65
Fair condition: grass cover on 50% to 75% of the area	---*	.45	.63	.74
Commercial and business areas (85% impervious)	.84	.90	.93	.96
Industrial districts (72% impervious)	.67	.81	.88	.92
Residential:				
Average lot size Average % impervious				
1/8 acre or less 65	.59	.76	.86	.90
1/4 acre 38	.25	.49	.67	.78
1/3 acre 30	---*	.49	.67	.78
1/2 acre 25	---*	.45	.65	.76
1 acre 20	---*	.41	.63	.74
Paved parking lots, roofs, driveways, etc.	.99	.99	.99	.99
Streets and roads:				
Paved with curbs and storm sewers	.99	.99	.99	.99
Gravel	.57	.76	.84	.88
Dirt	.49	.69	.80	.84

Notes: Values are based on SCS definitions and are average values.
Values indicated by ---* should be determined by the design engineer based on-site characteristics.

Source : New Jersey Department of Environmental Protection, Technical Manual for Stream Encroachment, August 1984

Appendix II – Worksheets

Preparer's Qualification Sheet

Standard Worksheet #2 – Fabric Filter Fence

Standard Worksheet #3 – Fabric Filter Fence

Compost Filter Sock Worksheet

Standard Worksheet #7 – Stabilization Specifications

Slope Matting Calculations

EROSION AND SEDIMENT POLLUTION CONTROL PLAN

Record of Training and Experience in Erosion and Sediment
Pollution Control Methods and Techniques

Name of Plan Preparer – Jeremy Reigle

Formal Education:

Name of College or Technical Institution: University of Delaware
Curriculum or Program: Engineering Technology
Dates Attended: From: September, 1996 To: January, 2001
Degrees Received: B.A.S. Engineering Technology

Employment History:

Current Employer: Borton-Lawson Engineering, Inc.
Telephone Number: (484) 821-0470
Years: 2 year +

Previous Employer Hunt Engineering Company
Telephone Number: (610) 644-4600
Years: 6 year

Recent Erosion and Sedimentation Control Plans Prepared:

Name of Project:	Sanofi Pasteur C.U.P. Phase 3	Liquid Fence Company New Manufacturing Facility	Sanofi Pasteur Tank Storage Facility and Small Projects
County:	Monroe	Monroe	Monroe
Municipality:	Pocono Township	Chestnuthill Township	Pocono Township
Permit Number: (if applicable)	PAS10S056R6	PAI024508012	PAS10S056R7
Approving Agency:	Monroe County Conservation District	Monroe County Conservation District	Monroe County Conservation District

STANDARD WORKSHEET #2
Standard Filter Fabric Fence

PROJECT NAME: Teegarden Park
LOCATION: Tredyffrin Township, Chester County PA
PREPARED BY: JDR DATE: 08/31/09
CHECKED BY: DATE:

CONSTRUCTION DETAIL:

***STAKES SPACED @ 8' MAX. USE 2" X 2" WOOD OR EQUIVALENT STEEL STAKES**

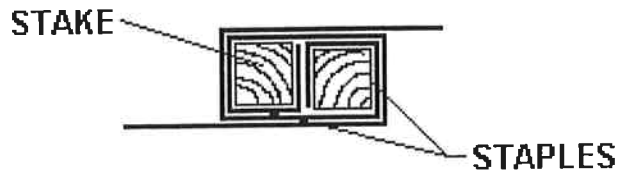

JOINING FENCE SECTIONS

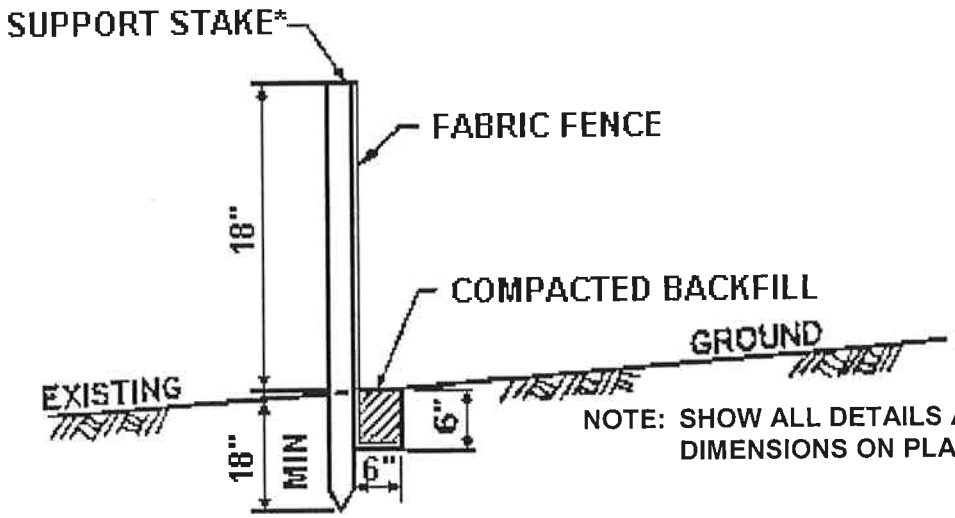

NOTE: SHOW ALL DETAILS AND CONSTRUCTION DIMENSIONS ON PLAN DRAWINGS.

Filter fabric fence must be installed at existing level grade. Both ends of each fence section must be extended at least 8 feet upslope at 45 degrees to the main fence alignment.

Sediment must be removed where accumulations reach 1/ 2 the above ground height of the fence.

Any fence section which has been undermined or topped must be immediately replaced with a rock filter outlet. See Rock Filter Outlet Detail.

BARRIER NO.	LOCATION	SLOPE-PERCENT	SLOPE LENGTH ABOVE BARRIER (FT)
FF18	North of Porous Pavement	Max. 30%	15 Max.
FF18	East of Rain Gardens	Max. 33%	15 Max.

STANDARD WORKSHEET # 3
Reinforced Filter Fabric Fence

PROJECT NAME: Teegarden Park
LOCATION: Tredyffrin Township, Chester County PA
PREPARED BY: JDR DATE: 08/31/09
CHECKED BY: DATE:

CONSTRUCTION DETAIL:

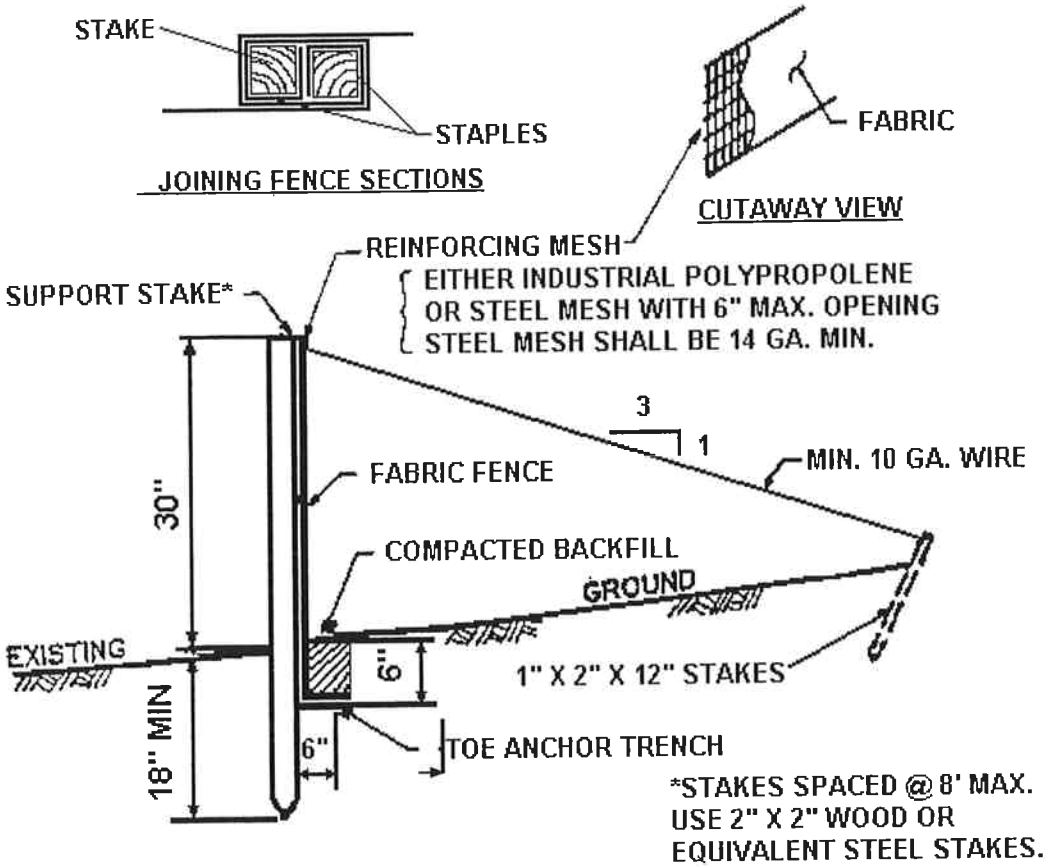

Filter fabric fence must be installed at existing level grade. Both ends of each fence section must be extended at least 8 feet upslope at 45 degrees to the main fence alignment.

Sediment must be removed where accumulations reach 1/ 2 the above ground height of the fence.

Any fence section which has been undermined or topped must be immediately replaced with a rock filter outlet. See Rock Filter Outlet Detail.

BARRIER NO.	LOCATION	SLOPE-PERCENT	SLOPE LENGTH ABOVE BARRIER (FT)
FF30	East of Porous Pavement	Max. 20% - Avg. 10%	70 – 150

Compost Filter Sock Worksheet

PROJECT NAME: Teegarden Park
LOCATION: Tredyffrin Township, Chester County, PA
PREPARED BY: JDR DATE: 08/31/2009
CHECKED BY: DATE:

CONSTRUCTION DETAIL:

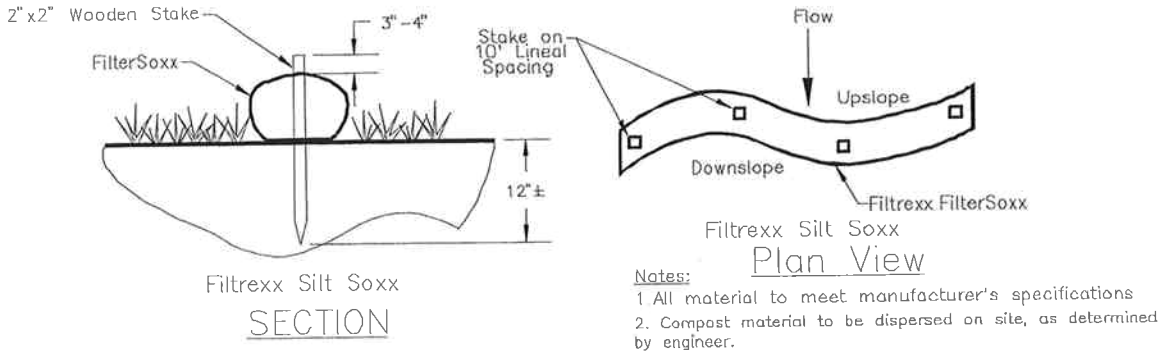

SILT SOCK DETAIL

Extend both ends of the compost filter sock at least 8 ft up slope at 45 degrees to the main alignment to allow for pooling of water. Ensure a minimum of 12 inches to either side of the area to be protected.

Accumulated sediment should be removed as necessary or when sediment accumulation reaches one-half the height of the exposed compost filter sock.

Any section of filter sock that has been undermined or washed out should be immediately replaced.

Compost Filter Sock NO.	LOCATION	SLOPE-PERCENT	SLOPE LENGTH ABOVE BARRIER (FT)
12" CFS	North of Rain Garden	>1%	750

STANDARD WORKSHEET #7
Temporary And Permanent Stabilization Specifications

PROJECT NAME: Teegarden Park
LOCATION: Tredyffrin Township, Chester County, PA
PREPARED BY: JDR DATE: 08/31/2009
CHECKED BY: _____ DATE: _____

SPECIFICATIONS: The Department recommends the use of the Penn State publication "EROSION CONTROL & Conservation Plantings on Noncropland" as the standard to use for the selection of species, seed specifications, mixtures, liming and fertilizing, time of seeding, and seeding methods. Specifications for these items may also be obtained from Penn DOT's Publication # 408, Section 804 or by contacting the applicable county conservation district. Upon selection of a reference, that reference must be used to provide all specifications for seeding, mulching, and soil amendments. The following specification will be used for this project:

(TEMPORARY)

SPECIES:	PennDOT Formula E
% PURE LIVE SEED:	98% %
APPLICATION RATE:	48.4 LB./ACRE
FERTILIZER TYPE:	-- (X-X-X)
FERTILIZER APPL. RATE:	-- LB./ACRE
LIMING RATE:	1.0 T./ACRE
MULCH TYPE:	Straw or Hay
MULCHING RATE:	3.0 T./ACRE

(PERMANENT)

SPECIES:	PennDOT Formula B
% PURE LIVE SEED:	98% %
APPLICATION RATE	101.6 LB./ACRE
FERTILIZER TYPE:	10-20-20 (X-X-X)
FERTILIZER APPL. RATE:	677.6 LB./ACRE
LIMING RATE:	4.5 T./ACRE
MULCH TYPE:	Straw or Hay
MULCHING RATE:	3.0 T./ACRE
ANCHOR MATERIAL:	Non-asphaltic Emulsion
ANCHORING METHOD:	Spray
RATE OF ANCHOR MATERIAL APPL.:	Manufact. recommended rate LB./ACRE
SEEDING SEASON DATES:	Mar. 15 to Jun.1; Aug. 1 to Oct. 15

(PERMANENT – STEEP SLOPE)

SPECIES:	PennDOT Formula D
% PURE LIVE SEED:	98% %
APPLICATION RATE:	101.6 LB./ACRE
FERTILIZER TYPE:	10-20-20 (X-X-X)
FERTILIZER APPL. RATE:	677.6 LB./ACRE
LIMING RATE:	4.5 T./ACRE
MULCH TYPE:	Straw or Hay
MULCHING RATE:	3.0 T./ACRE
ANCHOR MATERIAL:	Non-asphaltic Emulsion
ANCHORING METHOD:	Spray
RATE OF ANCHOR MATERIAL APPL.:	Manufact. recommended rate LB./ACRE
SEEDING SEASON DATES:	Mar. 15 to Jun.1; Aug. 1 to Oct. 15

*If more than one species is used, indicate application rate for each species.
Note: Show information from this sheet on plan drawings.

North American Green - ECMDS Version 4.3 | 8/26/2009 02:16 PM | COMPUTED BY: JDR

PROJECT NAME: Teegarden Park | PROJECT NO: 2007-2196-00 | SLOPE DESCRIPTION: Rain Gardens

Country	United States
State/Region	Pennsylvania
City	Philadelphia
Annual R Factor	150
Total Slope Length (ft)	10
Protection Type	Temporary
Protection Period (months)	12
Beginning Month	May
Adjusted R Value	150
Slope Gradient (H:1)	3
Soil Type	Silt Loam
K Factor	0.33
Soil Loss Tolerance (in)	0.25

Slope Gradient = 3:1

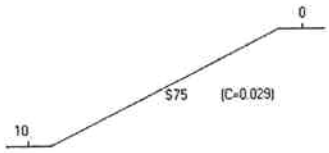

Not to Scale

Reach	Cum. Dist. Begin (ft)	Cum. Dist. End (ft)	Material			ASL bare (in)	ASL mat (in)	MSL bare (in)	MSL mat (in)	SLT (in)	SF	Remarks	Staple
1	0	10	S75			0.401	0.012	0.480	0.014	0.25	17.952	STABLE	B
2													
3													
	0	10		Composite		0.401	0.012						

Vegetation Density=Percentage of soil coverage provided by vegetation
ASLbare=Average Soil Loss potential of unprotected soil (uniform inches)
MSLbare=Maximum Soil Loss potential on unprotected soil (uniform inches)
SLT=Soil Loss Tolerance for slope segment (uniform inches)
Composite=Average soil loss from total slope length (uniform inches)

C=Cover material performance factor (Fraction of soil loss of unprotected)
ASLmat=Average Soil Loss potential w/material (uniform inches)
MSLmat=Maximum Soil Loss potential w/material (uniform inches)
SF=Safety Factor

North American Green - ECMDS Version 4.3 | 8/26/2009 | 02:11 PM | COMPUTED BY: JDR

PROJECT NAME: Teegarden Park | PROJECT NO.: 2007-2196-00 | SLOPE DESCRIPTION: Below Porous Pavement

Country	United States
State/Region	Pennsylvania
City	Philadelphia
Annual R Factor	150
Total Slope Length (ft)	7
Protection Type	Temporary
Protection Period (months)	12
Beginning Month	April
Adjusted R Value	150.
Slope Gradient (H:1)	2
Soil Type	Silt Loam
K Factor	0.33
Soil Loss Tolerance (in)	0.25

Slope Gradient = 2:1

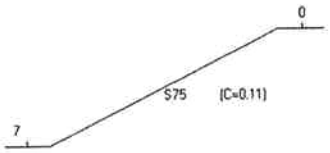

Not to Scale

Reach	Cum. Dist. Begin (ft)	Cum. Dist. End (ft)	Material	[illegible]	[illegible]	ASL bare (in)	ASL mat (in)	MSL bare (in)	MSL mat (in)	SLT (in)	SF	Remarks	Staple
1	0	7	S75			0.564	0.062	0.480	0.053	0.25	4.737	STABLE	8
2													
3													
	0	7		Composite		0.564	0.062						

Vegetation Density=Percentage of soil coverage provided by vegetation
ASLbare=Average Soil Loss potential of unprotected soil (uniform inches)
MSLbare=Maximum Soil Loss potential on unprotected soil (uniform inches)
SLT=Soil Loss Tolerance for slope segment (uniform inches)
Composite=Average soil loss from total slope length (uniform inches)

C=Cover material performance factor (Fraction of soil loss of unprotected)
ASLmat=Average Soil Loss potential w/material (uniform inches)
MSLmat=Maximum Soil Loss potential w/material (uniform inches)
SF=Safety Factor

MATERIAL SPECIFICATION

S75

The short-term single net erosion control blanket shall be a machine-produced mat of 100% agricultural straw with a functional longevity of up to 12 months. (NOTE: functional longevity may vary depending upon climatic conditions, soil, geographic location, and elevation).

The blanket shall be of consistent thickness with the straw evenly distributed over the entire area of the mat. The blanket shall be covered on the top side with a lightweight photodegradable polypropylene netting having an approximate 0.50 x 0.50 inch (1.27 x 1.27 cm) mesh and be sewn together on 1.50 inch (3.81 cm) centers with degradable thread.

The S75 shall meet requirements established by the Erosion Control Technology Council (ECTC) Specification and the U.S. Department of Transportation, Federal Highway Administration's (FHWA) *Standard Specifications For Construction of Roads and Bridges on Federal Highway Projects, FP-03 2003 Section 713.17* as a *Type 2.C Short-term Single Net Erosion Control Blanket.*

The blanket shall be manufactured with a colored line or thread stitched along both outer edges (approximately 2-5 inches [5-12.5 cm] from the edge) to ensure proper material overlapping.

The short-term single net erosion straw erosion control blanket shall be S75 as manufactured by North American Green, or equivalent.

The S75 erosion control blanket shall have the following properties:

Material Content

Matrix	100% Straw Fiber (0.50 lbs/yd²) (0.27 kg/m²)
Netting	Top side only, lightweight photodegradable Minimum netting weight (1.50 lbs/1,000 ft² [0.73 kg/100 m²] approx. weight)
Thread	Degradable

S75 is Available with the Following Physical Specifications Per Roll [English Units (Metric Units)]

Width	4.0 ft (1.20 m)	6.67 ft (2.03 m)	16.0 ft (4.87 m)
Length	135.0 ft (41.14 m)	108.0 ft (32.92 m)	108.0 ft (32.92 m)
Weight ± 10%	30.0 lbs (13.60 kg)	40.0 lbs (18.14 kg)	96.0 lbs (43.54 kg)
Area	60.0 yd² (50.16 m²)	80.0 yd² (66.89 m²)	192.0 yd² (165.53 m²)

Roll Widths Also Available Upon Special Request

Width	8.0 ft (2.43 m)	13.3 ft (4.05 m)
Length	108.0 ft (32.92 m)	108.0 ft (32.92 m)
Weight ± 10%	48.0 lbs (21.77 kg)	80.0 lbs (32.28 kg)
Area	96.0 yd² (80.26 m²)	160.0 yd² (133.78 m²)

Stitch Spacing for All Rolls = 1.50 inches (3.81 cm)

SUPPLEMENTAL SPECIFICATION

S75

The North American Green S75 short-term single net straw erosion control blanket is constructed with a 100% agricultural straw fiber matrix and has a functional longevity of up to 12 months. (NOTE: functional longevity may vary depending upon climatic conditions, soil, geographic location, and elevation). The straw fiber shall be evenly distributed over the entire area of the blanket. The blanket shall be covered on the top with a lightweight photodegradable polypropylene net having an approximate 0.50 x 0.50 inch (1.27 x 1.27 cm) mesh size. The blanket shall be sewn together on 1.50 inch (3.81 cm) centers with degradable thread. The following list contains further physical properties of the S75 erosion control blanket.

Property	Test Method	Typical
Thickness	ASTM D5199/ECTC	0.33 in (8.38 mm)
Resiliency	ECTC Guidelines	78.80%
Mass per Unit Area	ASTM D6475	6.42 oz/yd^2 (218 g/m^2)
Water Absorption	ASTM D1117/ECTC	424%
Swell	ECTC Guidelines	15%
Stiffness/Flexibility	ASTM D1388/ECTC	6.31 oz-in (70,523 mg-cm)
Light Penetration	ECTC Guidelines	11%
Smolder Resistance	ECTC Guidelines	Yes**
MD Tensile Strength	ASTM D5035	115.20 lbs/ft (1.68 kN/m)
MD Elongation	ASTM D5035	11.90%
TD Tensile Strength	ASTM D5035	93.60 lbs/ft (1.37 kN/m)
TD Elongation	ASTM D5035	9.60%

**Material is smolder resistant according to specified test
MD – Machine direction
TD – Transverse direction

Bench Scale Testing†

Test Method - Description	Parameters	Results
ECTC Method 2 – Determination of unvegetated RECP's ability to protect soil from rain splash and associated runoff	50 mm (2 in)/hr for 30 min	Soil loss ratio* = 8.80
	100 mm (4 in)/hr for 30 min	Soil loss ratio* = 8.16
	150 mm (6 in)/hr for 30 min	Soil loss ratio* = 7.81
ECTC Method 3 – Determination of unvegetated RECP's ability to protect soil from hydraulically-induced shear stress. **Failure criteria = 0.50 inch soil loss**	Shear: 1.26 lbs/ft^2 for 30 min	Soil loss: 142g
	Shear: 1.82 lbs/ft^2 for 30 min	Soil loss: 453g
	Shear: 2.39 lbs/ft^2 for 30 min	Soil loss: 980g
	Shear at 0.50 inch soil loss (450g)	**1.80 lbs/ft^2**
ECTC Draft Method 4 – Determination of temporary RECP performance in encouraging seed germination and plant growth	Top soil; Fescue (Kentucky 31); 21 day incubation 27° C ± 2° & approximately 50% RH	Percent improvement = 228% (increased biomass)

* Soil Loss Ratio = Soil Loss with Bare Soil / Soil Loss with RECP (NOTE: Soil loss based on regression analysis)

†Bench Scale Performance Testing

Bench scale tests are index property tests. These tests are not indicative of field performance and therefore should not be used in design to establish performance levels for rolled erosion control products. Bench scale tests are performed according to methods developed by the Erosion Control Technology Council (ECTC).

Updated 1/2004

PERFORMANCE SPECIFICATION

S75

The North American Green S75 straw erosion control blanket is constructed with a 100% agricultural straw fiber matrix and has a functional longevity of approximately 12 months. (NOTE: functional longevity may vary depending upon climatic conditions, soil, geographic location, and elevation). The straw fiber shall be evenly distributed over the entire area of the mat. The blanket shall be covered on the top with a lightweight photodegradable polypropylene net having an approximate 0.50 x 0.50 inch (1.27 x 1.27 cm) mesh size. The blanket shall be sewn together on 1.50 inch (3.81 cm) centers with degradable thread. The following list contains further physical properties of the S75 erosion control blanket.

Property	Test Method	Typical
Thickness	ASTM D6525	0.33 in (8.38 mm)
Resiliency	ECTC Guidelines	78.80%
Mass per Unit Area	ASTM D6475	6.42 oz/yd^2 (218 g/m^2)
Water Absorption	ASTM D1117/ECTC	424%
Swell	ECTC Guidelines	15%
Stiffness/Flexibility	ASTM D1388/ECTC	6.31 oz-in (70,523 mg-cm)
Light Penetration	ECTC Guidelines	11%
Smolder Resistance	ECTC Guidelines	Yes**
MD Tensile Strength	ASTM D5035	115.20 lbs/ft (1.68 kN/m)
MD Elongation	ASTM D5035	11.90%
TD Tensile Strength	ASTM D5035	93.60 lbs/ft (1.37 kN/m)
TD Elongation	ASTM D5035	9.60%

**Material is smolder resistant according to specified test
MD – Machine direction
TD – Transverse direction

Slope Design Data

Cover Factors (C)		Channel Roughness Coefficients	
	Slope Gradient (S)	Flow Depth	Manning's 'n'
Slope Length (L)	≤ 3:1	≤ 0.50 ft (0.15 m)	0.055
≤ 20 ft (6 m)	0.029	0.50-2.00 ft	0.055-0.021
20 – 50	0.110	≥ 2.00 ft (0.60 m)	0.021
≥ 50 ft (15.2 m)	0.190	Max. Permissible Shear Stress 1.55 lbs/ft^2 (74. 0 Pa)	

Channel Design Data

For most accurate design data consult ECMDS™
Manning's 'n' expressed in English units for unvegetated blankets

Bench Scale Testing†

Unvegetated Channel	2.0 lbs/ft^2

Approximate Max Flow Velocity
5.00 ft/s (1.52 m/s)

†Bench Scale Performance Testing

Bench scale tests are index property tests. These tests are not indicative of field performance and therefore should not be used in design to establish performance levels for rolled erosion control products. Bench scale tests are performed according to methods developed by the Erosion Control Technology Council (ECTC).

Updated 9/2004

Appendix III

Stormwater Runoff and Pipe Calculations

Teegarden Park-Watershed Runoff Coefficients Calculations

				Landuse Area (Arces)										
Watershed Area	Subarea	Total Area (Sq Mi)	Total Area (Acres)	Grass A	Woods A	Grass B	Woods B	Impervious A,B,C,D	Grass C	Woods C	Grass D	Woods D	Weighted C	TC (Minutes)
Porous Pavement	--	0.00080	0.515	0.000	0.000	0.300	0.000	0.215	0.000	0.000	0.000	0.000	0.56	5.00
Rain Garden	--	0.00156	0.974	0.000	0.000	0.000	0.000	0.005	0.000	0.000	0.969	0.000	0.65	5.00

*Rain Garden conservatively calculated as grass instead of meadow
*Porous pavement calculated as grass

C Values		
Grass	A	0.25
	B	0.25
	C	0.51
	D	0.65
Woods	A	0.45
	B	0.45
	C	0.45
	D	0.45
Meadow	A	0.44
	B	0.44
	C	0.44
	D	0.61
Impervious	A	0.99
	B	0.99
	C	0.99
	D	0.99

Hydrograph Return Period Recap

Hydraflow Hydrographs Extension for AutoCAD® Civil 3D® 2009 by Autodesk, Inc. v6.066

Hyd. No.	Hydrograph type (origin)	Inflow Hyd(s)	Peak Outflow (cfs)								Hydrograph description
			1-Yr	2-Yr	3-Yr	5-Yr	10-Yr	25-Yr	50-Yr	100-Yr	
1	Dekalb	------	1.225	1.441	-------	1.700	1.888	2.159	2.398	2.622	Porous Pavement Post
2	Dekalb	------	2.690	3.164	-------	3.732	4.145	4.740	5.265	5.755	Rain Garden Post

Hydrograph Summary Report

Hydraflow Hydrographs Extension for AutoCAD® Civil 3D® 2009 by Autodesk, Inc. v6.066

Hyd. No.	Hydrograph type (origin)	Peak flow (cfs)	Time interval (min)	Time to peak (min)	Hyd. volume (cuft)	Inflow hyd(s)	Maximum elevation (ft)	Total strge used (cuft)	Hydrograph description
1	Dekalb	1.441	1	25	1,293	------	------	------	Porous Pavement Post
2	Dekalb	3.164	1	25	2,838	------	------	------	Rain Garden Post

Hydrograph Report

Hydraflow Hydrographs Extension for AutoCAD® Civil 3D® 2009 by Autodesk, Inc. v6.066 Tuesday, Aug 25, 2009

Hyd. No. 1

Porous Pavement Post

Hydrograph type	= Dekalb	Peak discharge	= 1.441 cfs
Storm frequency	= 2 yrs	Time to peak	= 25 min
Time interval	= 1 min	Hyd. volume	= 1,293 cuft
Drainage area	= 0.515 ac	Runoff coeff.	= 0.56
Intensity	= 4.998 in/hr	Tc by User	= 5.00 min
IDF Curve	= New PENNDOT Curve.IDF	Asc/Rec limb fact	= n/a

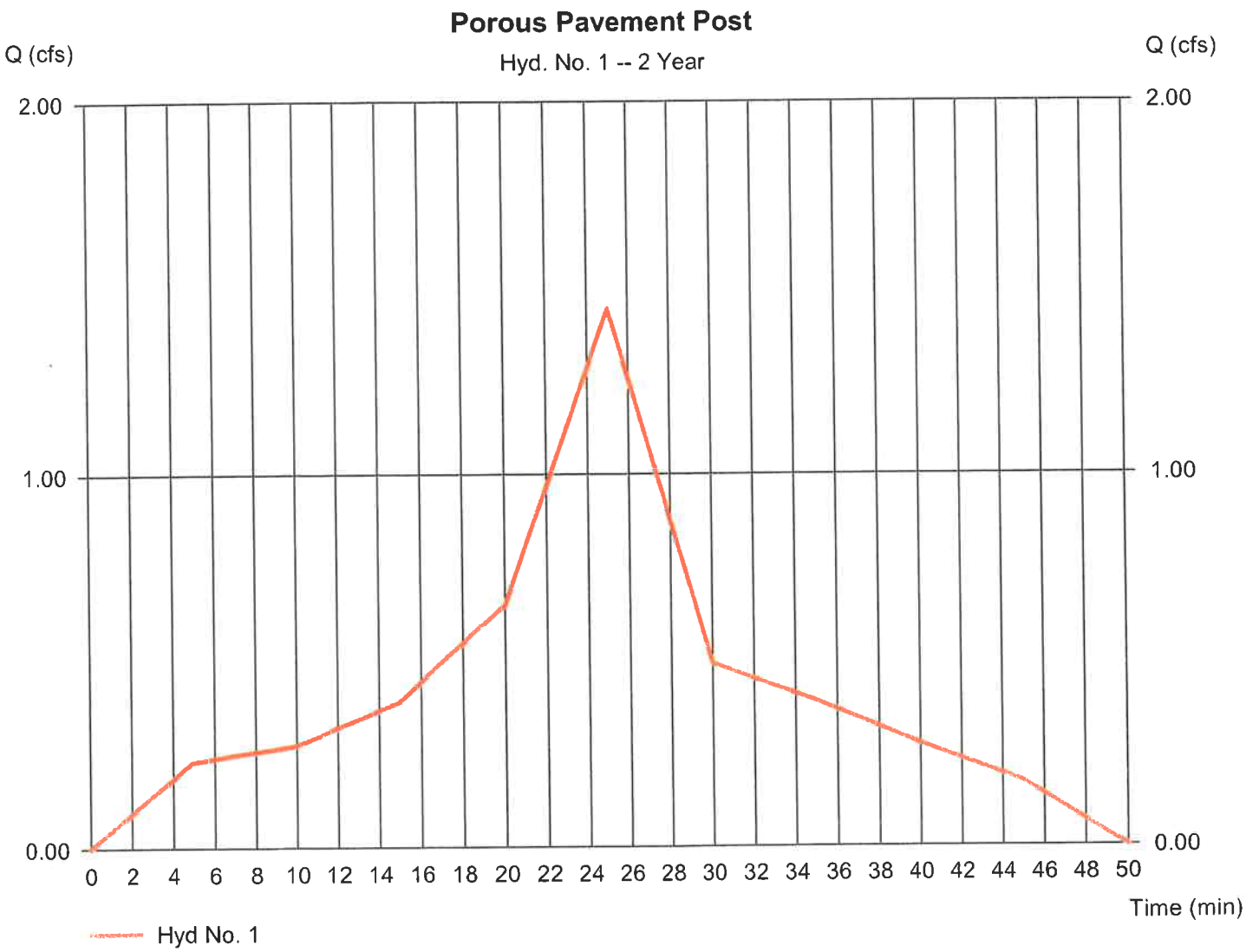

Hydrograph Report

Hydraflow Hydrographs Extension for AutoCAD® Civil 3D® 2009 by Autodesk, Inc. v6.066 Tuesday, Aug 25, 2009

Hyd. No. 2

Rain Garden Post

Hydrograph type	=	Dekalb	Peak discharge	=	3.164 cfs
Storm frequency	=	2 yrs	Time to peak	=	0.42 hrs
Time interval	=	1 min	Hyd. volume	=	2,838 cuft
Drainage area	=	0.974 ac	Runoff coeff.	=	0.65
Intensity	=	4.998 in/hr	Tc by User	=	5.00 min
IDF Curve	=	New PENNDOT Curve.IDF	Asc/Rec limb fact	=	n/a

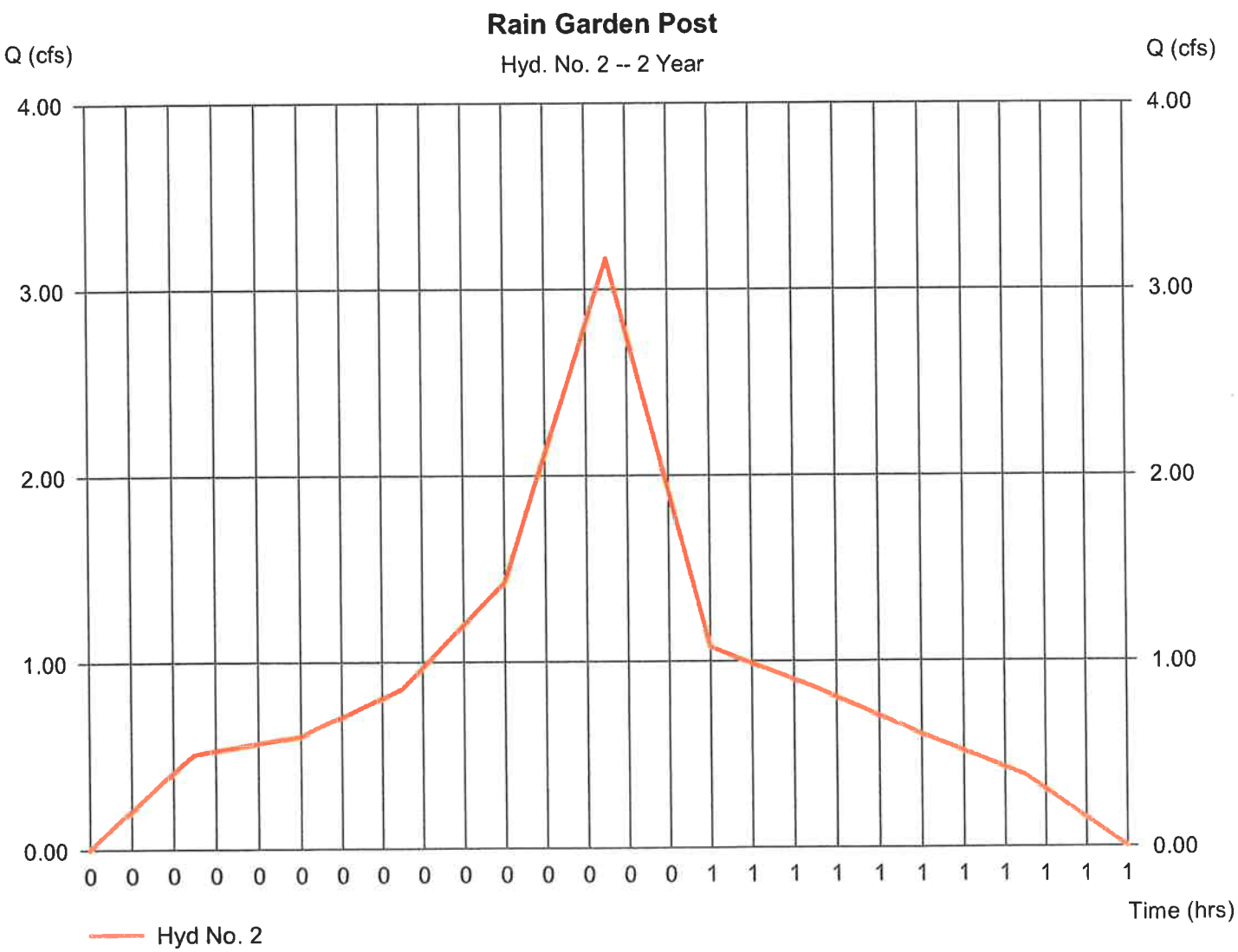

Hydrograph Summary Report

Hydraflow Hydrographs Extension for AutoCAD® Civil 3D® 2009 by Autodesk, Inc. v6.066

Hyd. No.	Hydrograph type (origin)	Peak flow (cfs)	Time interval (min)	Time to peak (min)	Hyd. volume (cuft)	Inflow hyd(s)	Maximum elevation (ft)	Total strge used (cuft)	Hydrograph description
1	Dekalb	2.159	1	25	1,937	------	------	------	Porous Pavement Post
2	Dekalb	4.740	1	25	4,252	------	------	------	Rain Garden Post

Hydrograph Report

Hydraflow Hydrographs Extension for AutoCAD® Civil 3D® 2009 by Autodesk, Inc. v6.066 Wednesday, Aug 26, 2009

Hyd. No. 1

Porous Pavement Post

Hydrograph type	=	Dekalb	Peak discharge	=	2.159 cfs
Storm frequency	=	25 yrs	Time to peak	=	25 min
Time interval	=	1 min	Hyd. volume	=	1,937 cuft
Drainage area	=	0.515 ac	Runoff coeff.	=	0.56
Intensity	=	7.488 in/hr	Tc by User	=	5.00 min
IDF Curve	=	New PENNDOT Curve.IDF	Asc/Rec limb fact	=	n/a

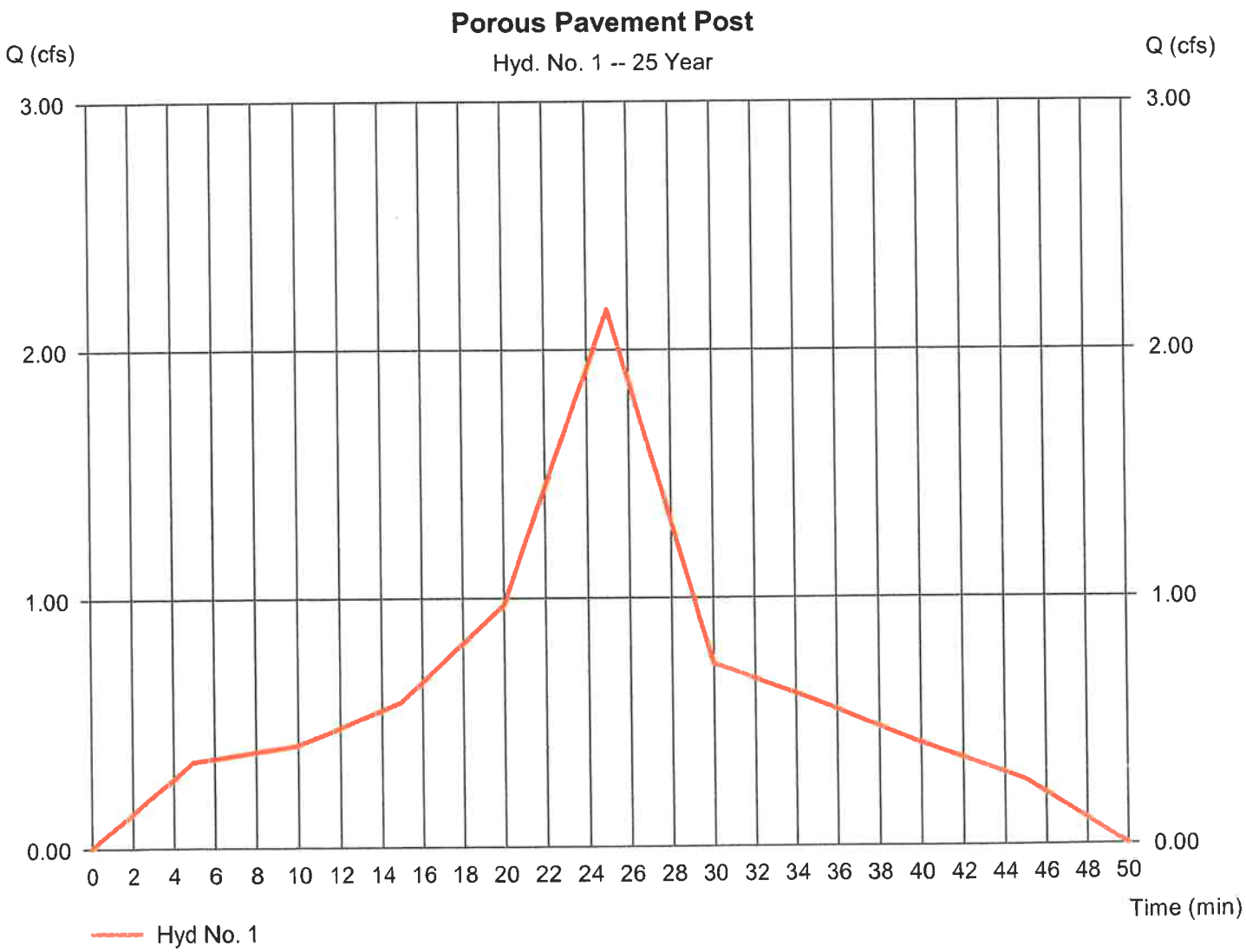

Hydrograph Report

Hydraflow Hydrographs Extension for AutoCAD® Civil 3D® 2009 by Autodesk, Inc. v6.066 Tuesday, Aug 25, 2009

Hyd. No. 2

Rain Garden Post

Hydrograph type	= Dekalb	Peak discharge	= 4.740 cfs
Storm frequency	= 25 yrs	Time to peak	= 0.42 hrs
Time interval	= 1 min	Hyd. volume	= 4,252 cuft
Drainage area	= 0.974 ac	Runoff coeff.	= 0.65
Intensity	= 7.488 in/hr	Tc by User	= 5.00 min
IDF Curve	= New PENNDOT Curve.IDF	Asc/Rec limb fact	= n/a

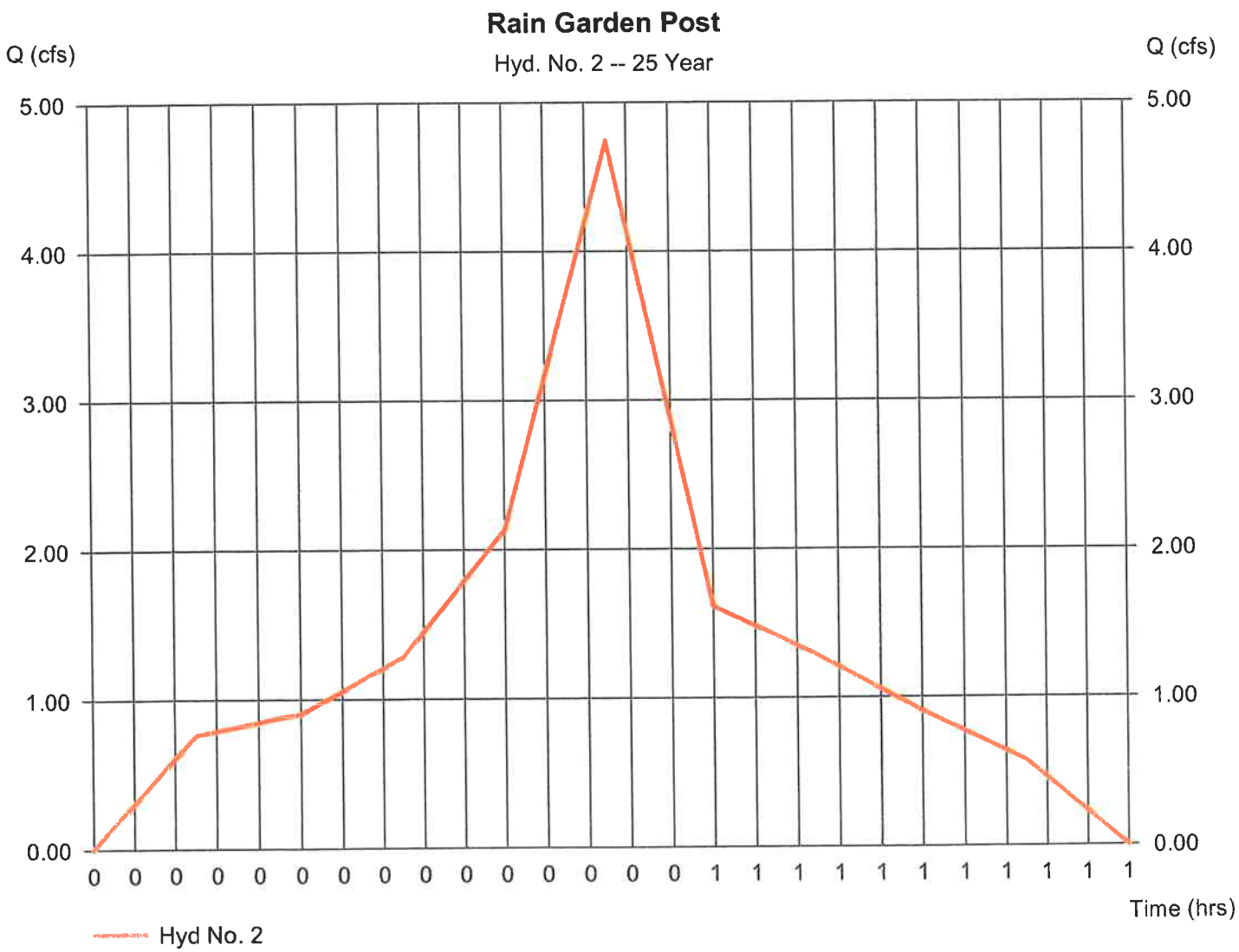

Hydrograph Summary Report

Hydraflow Hydrographs Extension for AutoCAD® Civil 3D® 2009 by Autodesk, Inc. v6.066

Hyd. No.	Hydrograph type (origin)	Peak flow (cfs)	Time interval (min)	Time to peak (min)	Hyd. volume (cuft)	Inflow hyd(s)	Maximum elevation (ft)	Total strge used (cuft)	Hydrograph description
1	Dekalb	2.622	1	25	2,352	------	------	------	Porous Pavement Post
2	Dekalb	5.755	1	25	5,162	------	------	------	Rain Garden Post

Hydrograph Report

Hydraflow Hydrographs Extension for AutoCAD® Civil 3D® 2009 by Autodesk, Inc. v6.066 Wednesday, Aug 26, 2009

Hyd. No. 1

Porous Pavement Post

Hydrograph type	=	Dekalb	Peak discharge	=	2.622 cfs
Storm frequency	=	100 yrs	Time to peak	=	25 min
Time interval	=	1 min	Hyd. volume	=	2,352 cuft
Drainage area	=	0.515 ac	Runoff coeff.	=	0.56
Intensity	=	9.090 in/hr	Tc by User	=	5.00 min
IDF Curve	=	New PENNDOT Curve.IDF	Asc/Rec limb fact	=	n/a

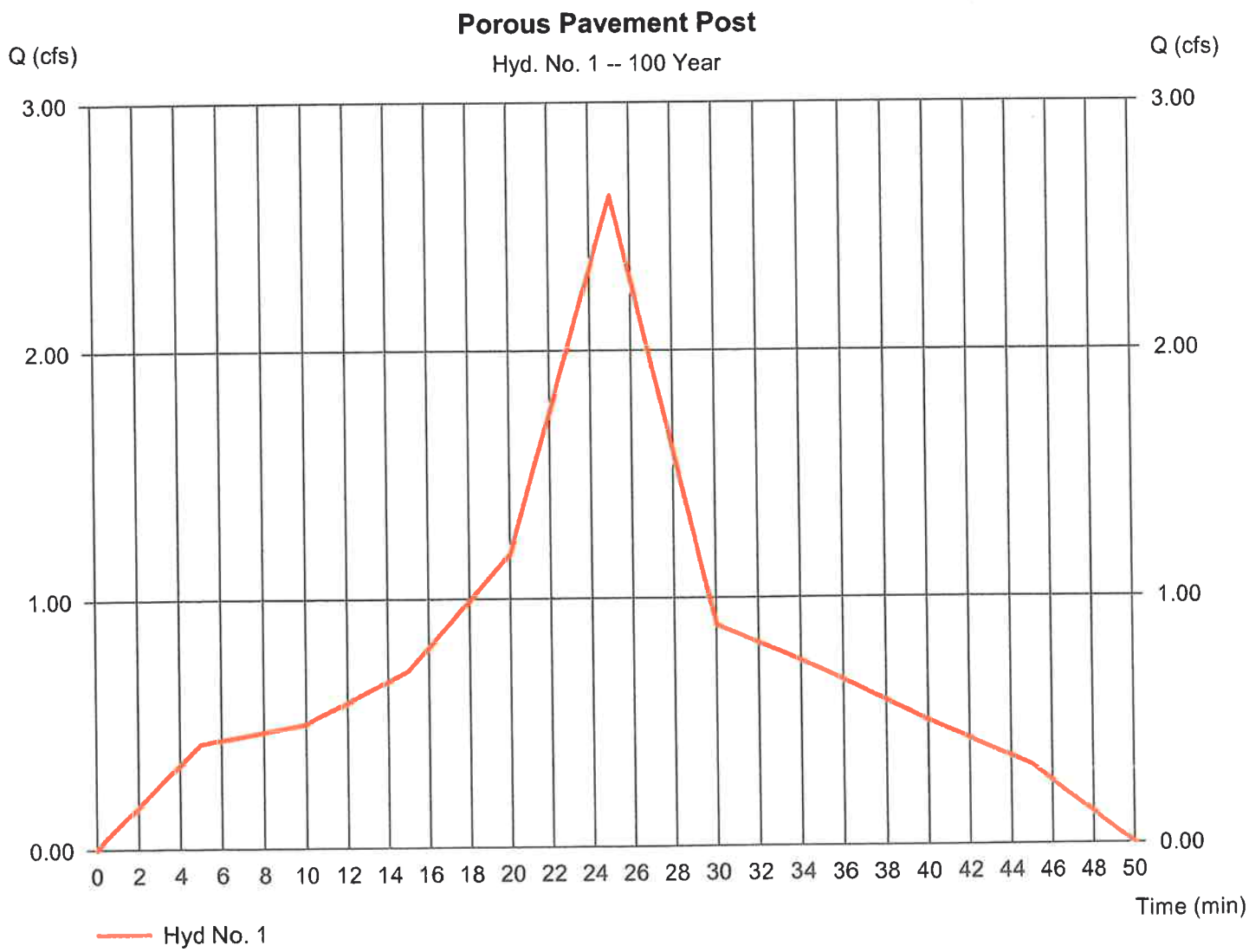

Hydrograph Report

Hydraflow Hydrographs Extension for AutoCAD® Civil 3D® 2009 by Autodesk, Inc. v6.066 Tuesday, Aug 25, 2009

Hyd. No. 2

Rain Garden Post

Hydrograph type	=	Dekalb	Peak discharge	=	5.755 cfs
Storm frequency	=	100 yrs	Time to peak	=	0.42 hrs
Time interval	=	1 min	Hyd. volume	=	5,162 cuft
Drainage area	=	0.974 ac	Runoff coeff.	=	0.65
Intensity	=	9.090 in/hr	Tc by User	=	5.00 min
IDF Curve	=	New PENNDOT Curve.IDF	Asc/Rec limb fact	=	n/a

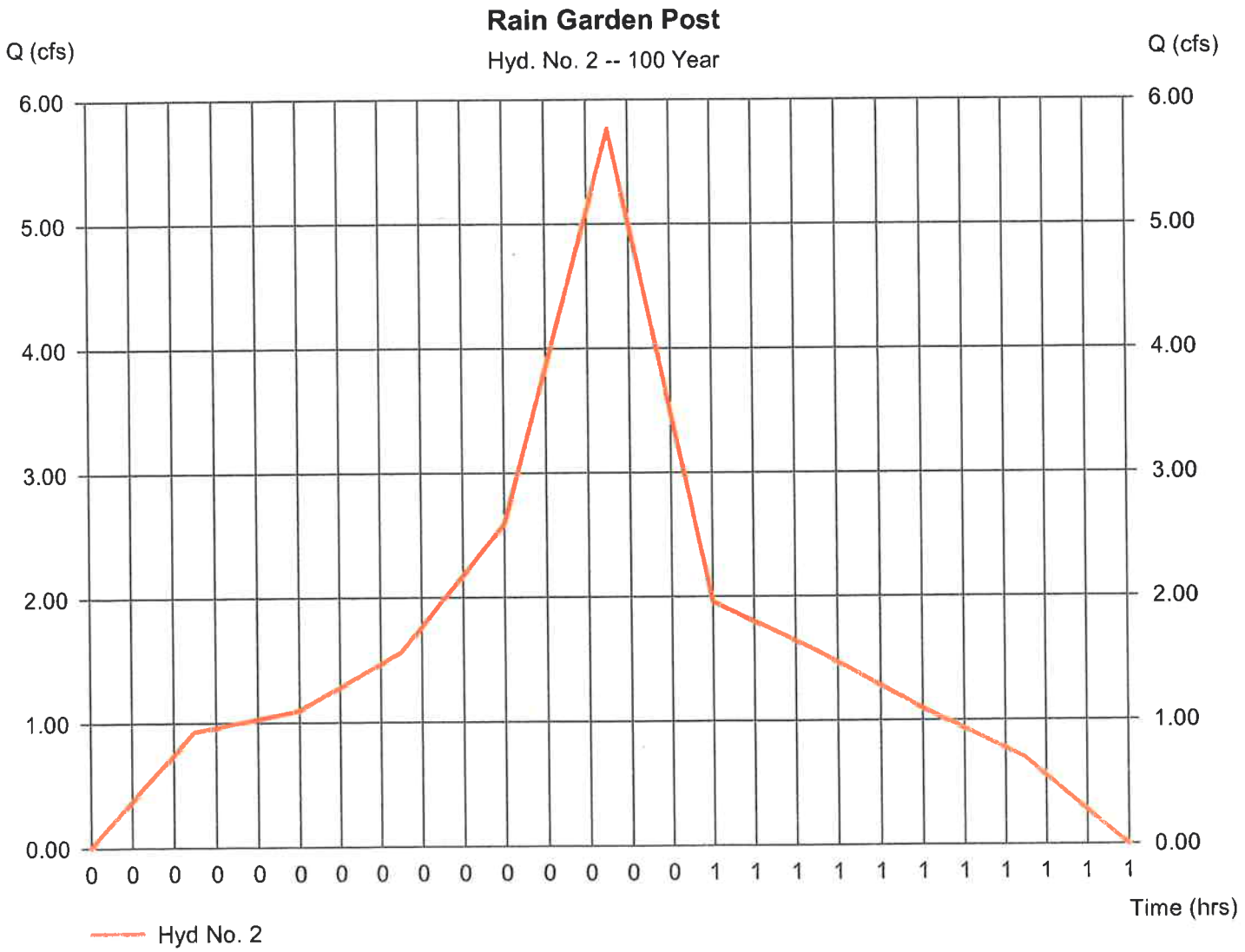

Hydraflow Rainfall Report

Hydraflow Hydrographs Extension for AutoCAD® Civil 3D® 2009 by Autodesk, Inc. v6.066 Tuesday, Aug 25, 2009

Return Period (Yrs)	Intensity-Duration-Frequency Equation Coefficients (FHA)			
	B	D	E	(N/A)
1	42.8289	10.1000	0.8512	--------
2	32.4774	7.4000	0.7433	--------
3	0.0000	0.0000	0.0000	--------
5	25.2298	4.8000	0.6370	--------
10	57.2873	10.1000	0.7990	--------
25	68.4228	10.8000	0.8016	--------
50	36.6337	5.3000	0.6358	--------
100	46.0104	6.6000	0.6616	--------

File name: New PENNDOT Curve.IDF

Intensity = B / (Tc + D)^E

Return Period (Yrs)	Intensity Values (in/hr)											
	5 min	10	15	20	25	30	35	40	45	50	55	60
1	4.25	3.33	2.76	2.36	2.07	1.85	1.67	1.53	1.41	1.31	1.22	1.15
2	5.00	3.89	3.22	2.77	2.45	2.20	2.00	1.84	1.71	1.60	1.50	1.42
3	0.00	0.00	0.00	0.00	0.00	0.00	0.00	0.00	0.00	0.00	0.00	0.00
5	5.90	4.53	3.77	3.26	2.90	2.63	2.41	2.24	2.09	1.97	1.86	1.77
10	6.55	5.21	4.36	3.77	3.34	3.00	2.73	2.51	2.33	2.17	2.04	1.92
25	7.49	6.01	5.05	4.38	3.89	3.50	3.19	2.94	2.72	2.54	2.39	2.25
50	8.32	6.47	5.40	4.70	4.19	3.80	3.49	3.24	3.03	2.86	2.70	2.57
100	9.09	7.17	6.02	5.25	4.68	4.25	3.90	3.62	3.39	3.19	3.01	2.86

Tc = time in minutes. Values may exceed 60.

Precip. file name: 50 year NEW PDT.pcp

Storm Distribution	Rainfall Precipitation Table (in)							
	1-yr	2-yr	3-yr	5-yr	10-yr	25-yr	50-yr	100-yr
SCS 24-hour	0.00	0.00	0.00	3.30	4.25	5.77	0.00	7.95
SCS 6-Hr	0.00	0.00	0.00	0.00	2.60	0.00	0.00	4.00
Huff-1st	0.00	0.00	0.00	2.75	4.00	5.38	0.00	8.00
Huff-2nd	0.00	0.00	0.00	0.00	0.00	0.00	0.00	0.00
Huff-3rd	0.00	0.00	0.00	0.00	0.00	0.00	0.00	0.00
Huff-4th	0.00	0.00	0.00	0.00	0.00	0.00	0.00	0.00
Huff-Indy	0.00	0.00	0.00	0.00	0.00	0.00	0.00	0.00
Custom	2.64	3.16	0.00	3.91	4.57	5.60	6.53	7.63

BORTON-LAWSON
LEHIGH VALLEY OFFICE
3893 ADLER PLACE SUITE 100
BETHLEHEM, PA 18017
(484) 821-0470
FAX (484) 821-0474

JOB 2006-2196-00
SHEET NO. _____ OF _____
CALCULATED BY _____ DATE 8/18/09
CHECKED BY _____ DATE _____
SCALE _____

RAINGARDEN

FOOTPRINT ≅ 2740 SF (4 POOLS)
IMPERVIOUS MAXIMUM = 13,700 SF (0.315 AC) } MAXIMUM SURFACE DRAINAGE
TOTAL DRAINAGE MAXIMUM = 21,920 SF (0.50 AC) } AREAS TO SATISFY BMP
CAPACITY ≅ 4,420 CF LOADING RATIO

WATERSHED

TOTAL:	0.974 AC	>	0.50 AC MAX.
IMPERVIOUS:	0.005 AC	<	0.315 AC MAX.
PERVIOUS:	0.969 AC		

PRELIMINARY WATERSHED ANALYSIS
(ASSUME D LAWN FOR CALCS & 5 MIN. T_c)

2 YEAR Q = 3.164 cfs VOLUME = 2,838 CF
100 YEAR Q = 5.755 cfs VOLUME = 5,162 CF

OBJECTIVE: THE PROPOSED RAIN GARDEN WILL BE CONSTRUCTED TO REDUCE RUNOFF VOLUME, FILTER POLLUTANTS, RECHARGE GROUNDWATER BY INFILTRATION, REDUCE THERMAL IMPACTS, ENHANCE EVAPOTRANSPIRATION, ENHANCE AESTHETICS, AND PROVIDE HABITAT.

CONCLUSION: THE POROUS PAVEMENT/INFILTRATION BASIN WILL PROVIDE ADEQUATE SURFACE AREA AND STORAGE VOLUME TO REDUCE THE 2 YEAR STORM RUNOFF. THERE IS FLEXIBILITY IN THE DESIGN TO HANDLE LARGER STORM RUNOFF EVENTS IF DESIRED, BUT THE OVERALL FOOTPRINT WILL NEED TO REMAIN THE SAME TO MEET THE PADEP LOADING RATIO REQUIREMENTS.

THE RAIN GARDEN IS IN A LOCATION WITH A HIGH WATER TABLE. SINCE THE LIMITING ZONE IS NEXT TO THE SURFACE, THE RAIN GARDEN'S ABILITY TO INFILTRATE STORM RUNOFF IS LIMITED. IT WILL LARGELY BE USED FOR EVAPOTRANSPIRATION, FILTERING OF POLLUTANTS, PROVIDING BIODIVERSITY AND HABITAT, AND ENHANCE LANDSCAPE AESTHETICS.

PRODUCT 204-1 (Single Sheets) 205-1 (Padded)

BORTON-LAWSON
LEHIGH VALLEY OFFICE
3893 ADLER PLACE SUITE 100
BETHLEHEM, PA 18017
(484) 821-0470
FAX (484) 821-0474

JOB 2007-2196-00
SHEET NO. ____ OF ____
CALCULATED BY ____ DATE 8/18/09
CHECKED BY ____ DATE ____
SCALE ____

POROUS PAVEMENT

OVERALL DIMENSIONS = 63'W x 120'L
FOOTPRINT = (63'L x 15'W) x (4 BAYS) = 3780 SF
IMPERVIOUS MAXIMUM = 18,000 SF } MAXIMUM SURFACE DRAINAGE AREAS
TOTAL DRAINAGE MAXIMUM = 28,800 SF } TO SATISFY BMP LOADING RATIO
CAPACITY (MAXIMUM) = 5154 CF

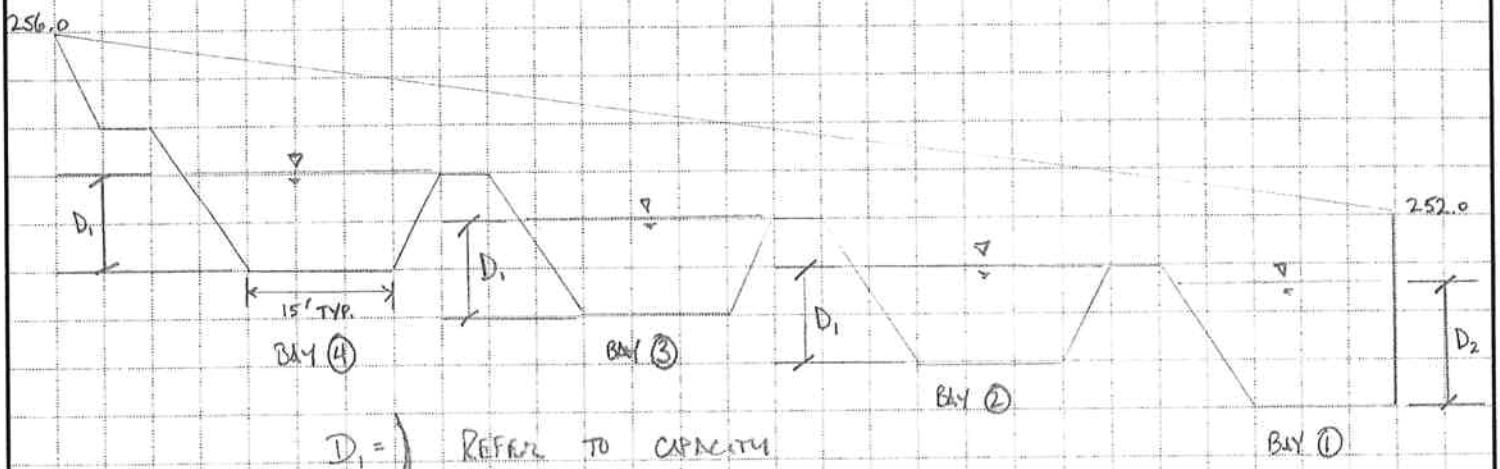

D_1 = } REFER TO CAPACITY
D_2 = } SHEET FOR DEPTH DETAILS

WATERSHED

TOTAL: 0.515 AC < 0.661 AC MAX.
IMPERVIOUS: 0.215 AC < 0.413 AC MAX.
PERVIOUS: 0.30 AC

PRELIMINARY WATERSHED ANALYSIS:
(ASSUME D LAWN FOR CALCS & 5 MIN T_c)

2 YEAR Q = 1.441 CFS VOLUME = 1,293 CF
100 YEAR Q = 2.622 CFS VOLUME = 2,352 CF

OBJECTIVE: POROUS PAVEMENT AND INFILTRATION BASIN WILL BE CONSTRUCTED TO ATTENUATE AND INFILTRATE THE 2 YEAR STORM RUNOFF VOLUME FROM PARKING LOT AND SURROUNDING WATERSHED.

BORTON-LAWSON
LEHIGH VALLEY OFFICE
3893 ADLER PLACE SUITE 100
BETHLEHEM, PA 18017
(484) 821-0470
FAX (484) 821-0474

JOB 2006-2196-00
SHEET NO. _____ OF _____
CALCULATED BY _____ DATE _____
CHECKED BY _____ DATE _____
SCALE NO SCALE

POROUS PAVEMENT - INFILTRATION BASIN CAPACITY

BAY 1:

VOLUME:
$(3.5')(15')(60'L) = 3150$ CF
$(0.5)(3.5')(7')(60'L) = 735$ CF

TOTAL: 3150 CF + 735 CF = 3885 CF

BAYS 2, 3, 4:

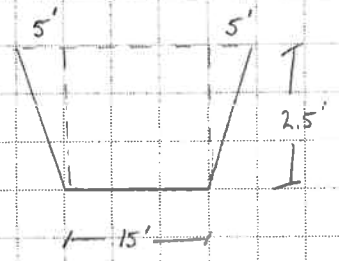

VOLUME:
$(2.5')(15')(60'L) = 2250$ CF
$(0.5)(2.5')(5')(60'L)(2) = 750$ CF

TOTAL = 2250 CF + 750 CF = 3000 CF
× 3
9000 CF

3885 CF + 9000 CF = 12885 × 40% VOID RATIO = 5154 CF

BORTON-LAWSON
LEHIGH VALLEY OFFICE
3893 ADLER PLACE SUITE 100
BETHLEHEM, PA 18017
(484) 821-0470
FAX (484) 821-0474

JOB 2006-2196-00
SHEET NO. ____ OF ____
CALCULATED BY ____ DATE 8/18/09
CHECKED BY ____ DATE ____
SCALE ____

PRELIMINARY POROUS PAVEMENT OUTLET DESIGN

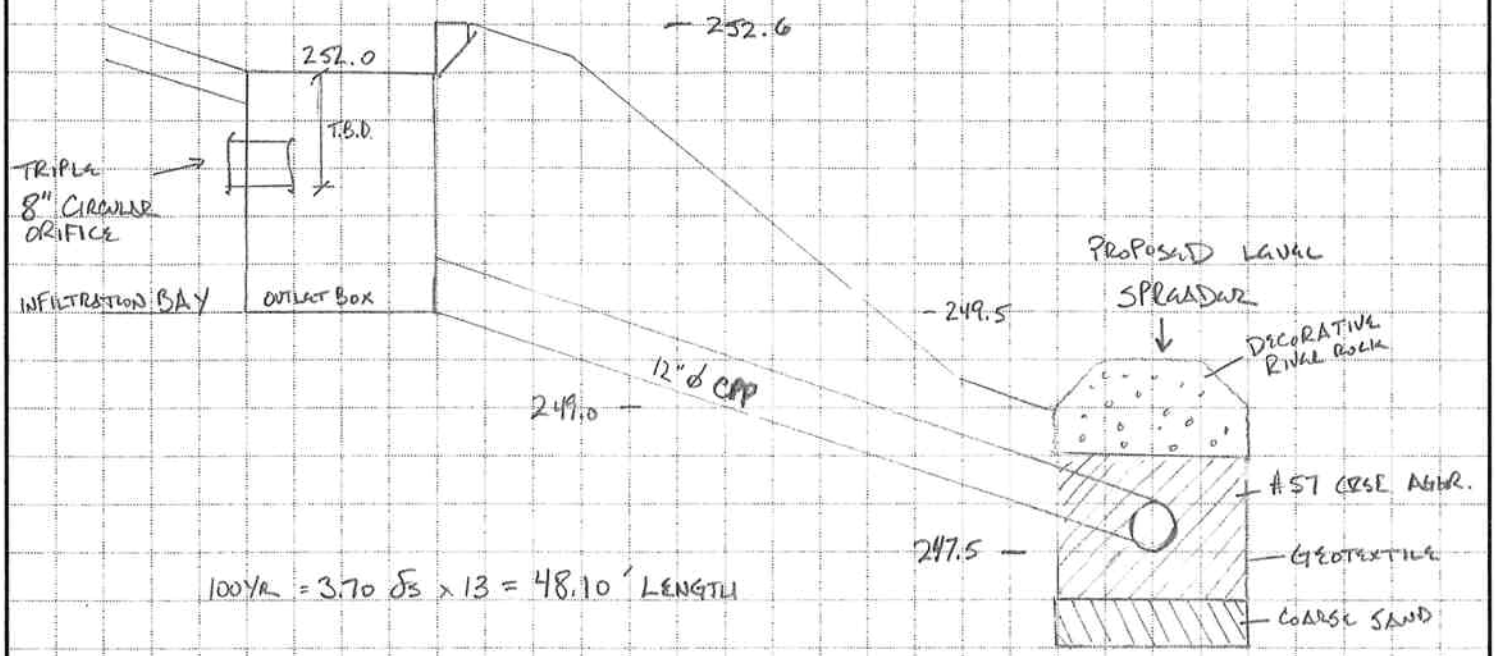

100YR = 3.70 δs x 13 = 48.10' LENGTH

SOIL DATA:

SOIL TYPES ARE TAKEN FROM USDA SOIL SURVEY OF CHESTER COUNTY

Ha — Ha = HATBORO SILT LOAM
0-3 PERCENT SLOPES
DEPTH TO SEASONAL HIGH WATER TABLE >0.5 FEET. DEPTH TO BEDROCK 60-99 INCHES.
HYDROLOGIC SOIL GROUP – D

Ho — Ho = HOLLY SILT LOAM
0-3 PERCENT SLOPES
DEPTH TO SEASONAL HIGH WATER TABLE >1.0 FEET. DEPTH TO BEDROCK >80 INCHES.
HYDROLOGIC SOIL GROUP – D

HIC — HIC = HOLLINGER SILT LOAM
8-15 PERCENT SLOPES
DEPTH TO SEASONAL HIGH WATER TABLE >80 INCHES. DEPTH TO BEDROCK 60-99 INCHES.
HYDROLOGIC SOIL GROUP – B

LEGEND

WATERSHED BOUNDARY LINE

SOIL BOUNDARY LINE

GRAPHIC SCALE: 1" = 60'

60 0 60 120

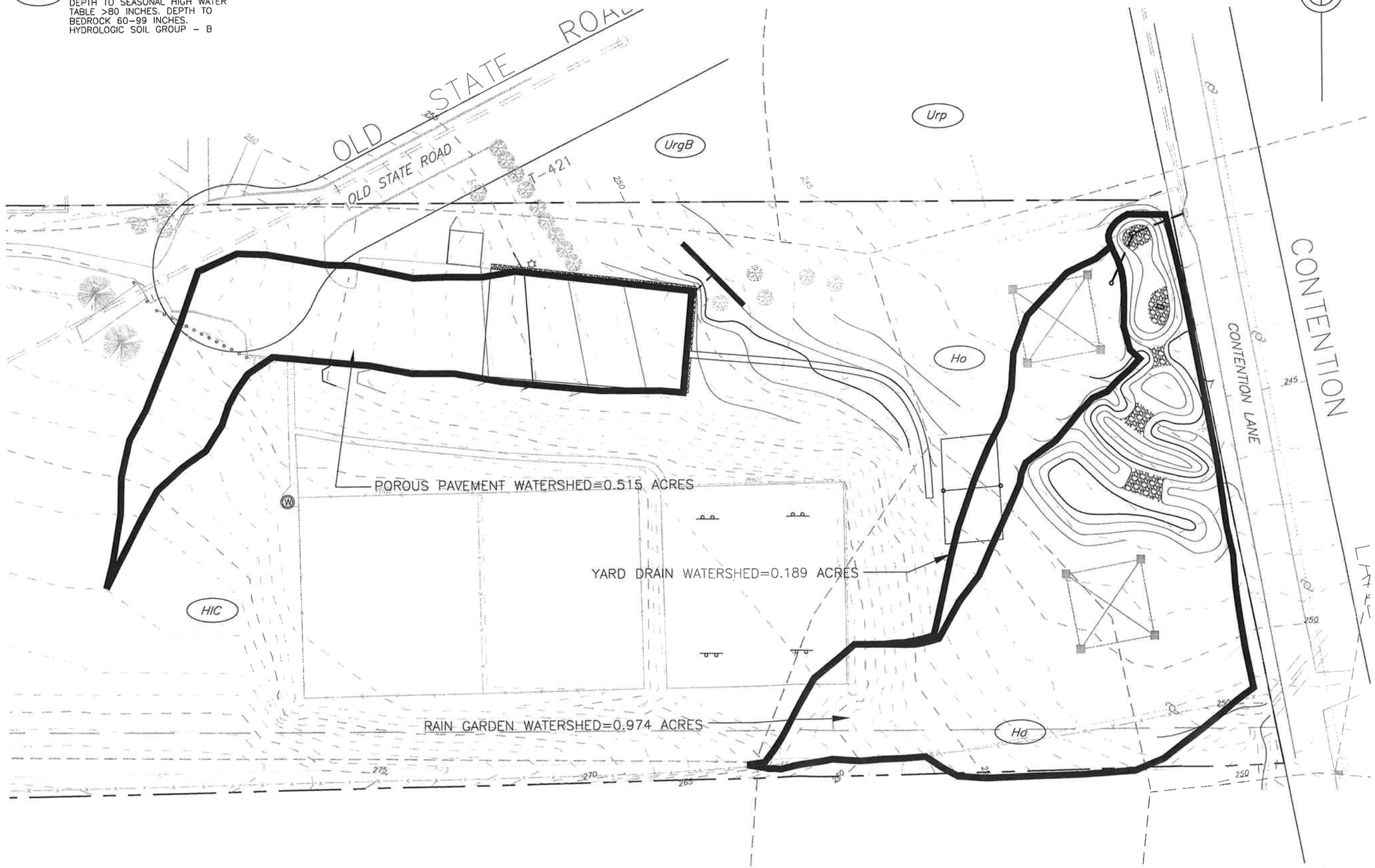

STORMWATER BMP WATERSHED MAP

TEEGARDEN PARK

TREDYFFRIN TOWNSHIP

CHESTER COUNTY, PA.

Borton Lawson
ENGINEERING
ARCHITECTURE
www.borton-lawson.com

Northeast Pennsylvania
613 Baltimore Drive
Suite 300
Wilkes-Barre, PA. 18702-7903
Voice: 570-821-1999
Fax: 570-821-1990

Lehigh Valley
3893 Adler Place
Suite 100
Bethlehem, PA. 18017
Voice: 484-821-0470
Fax: 484-821-0474

PROJECT NO. 2007-2196-00

DATE: 08/31/2009

DR.BY: JDR

SCALE: 1"=60'

CH.BY:

DRAWING NO.

1 of 1

RUNOFF CALCULATIONS

Drainage Area	Structure	Outlet Pipe	Area (ac)	A,B,C Imp. (ac)	B Lawn (ac)	D Lawn (ac)	Weighted C	Tc (min)	Intensity (in/hr)*	Q=CIA 25-yr Q (cfs)
Pervious Pavement	I-1	P-1	*0.515*	*0.215*	*0.300*	*0.000*	*0.56*	*5.00*	*7.50*	*2.16*
Yard Drain	YD-1	P-4	*0.189*	*0.000*	*0.000*	*0.189*	*0.65*	*5.00*	*7.50*	*0.92*
Rain Gardens	I-2,I-3	P-2,P-3	*0.974*	*0.005*	*0.000*	*0.969*	*0.65*	*5.00*	*7.50*	*4.76*

Rational C Coefficients**

Soil Type	Coverage	C	Soil Type	Coverage	C
B	Meadow	--	D	Meadow	0.61
	Lawn	0.25		Lawn	0.65
	Forest	--		Forest	0.59
	Gravel	0.76		Gravel	0.88
	Paved	0.99		Paved	0.99

STORM STRUCTURE SCHEDULE

Structure	Rim Elev.	Pipe No. In.	Inv. In	Pipe No. Out	Inv. Out	Remarks
I-1	242.50	P-3	239.100	P-2	239.000	Type M Inlet
I-2	251.75	--	--	P-1	249.500	Type M Inlet
XI-1	242.50	--	--	XP-1	239.590	Type M Inlet
YD-1	242.50	--	--	P-3	240.00	Nyloplast Drain Basin

PIPE SCHEDULE

Pipe	Size (in)	Type*	Manning's "n"	Invert UP Elevation	Invert DN Elevation	Length (ft)	Slope	Capacity Qfull** (cfs)	25-YR Design Flow (cfs)	Contributing Area
P-1	12	CPP	0.024	249.50	247.50	15	13.33%	7.05	2.16	Pervious Pavement
P-2	12	CPP****	0.024	247.50	247.50	50	0.00%	0.00	2.16	Pervious Pavement
P-3	15	SLCPP	0.012	239.00	238.30	34	2.06%	10.04	0.92	Yard Drain
P-4	15	SLCPP	0.012	240.00	239.10	33	2.73%	11.56	5.68	Rain Garden + Yard Drain
XP-1	15	CMP	0.024	239.59	238.17	58	2.45%	5.48	4.76	Rain Garden***

*SLCPP: smooth-lined corrugated polyethylene; CPP: corrugated plastic pipe; CMP: corrugated metal pipe

**Per Manning's Equation

***Rain Garden conservatively routed as if only one of outlet structures was functioning.

****Perforated CPP

BORTON-LAWSON
LEHIGH VALLEY OFFICE
3893 ADLER PLACE SUITE 100
BETHLEHEM, PA 18017
(484) 821-0470
FAX (484) 821-0474

JOB 2007-2196-00 TREGARDEN PARK
SHEET NO. ____ OF ____
CALCULATED BY ____ DATE ____
CHECKED BY ____ DATE ____
SCALE ____

DECORATIVE RIVER ROCK BETWEEN RAIN GARDENS

- CHECK FOR DEPTH OF FLOW @ 25YR STORM

$Q = 4.847\ cfs$
$L = 21.5'$
$C = 3.1$

$Q = C \cdot L \cdot H^{1.5}$
$4.847 = (3.1)(21.5)(H^{1.5})$
$H = 0.174' + 0.5' = 0.674' < 1.5'$

$Q = 4.847\ cfs$
$L = 11'$
$C = 3.1$

$4.847 = (3.1)(11)(H^{1.5})$
$H = 0.272' + 0.5' = 0.772' < 1.5'$

$Q = 4.847\ cfs$
$L = 6.8'$
$C = 3.1$

$4.847 = (3.1)(6.8)(H^{1.5})$
$H = 0.375' + 0.5' = 0.875' < 1.5'$

- CHECK FOR DEPTH OF FLOW @ 100YR STORM

$Q = 5.885\ cfs$
$L = 21.5'$
$C = 3.1$

$5.885 = (3.1)(21.5)(H^{1.5})$
$H = 0.198'$

$Q = 5.885\ cfs$
$L = 11'$
$C = 3.1$

$5.885 = (3.1)(11')(H^{1.5})$
$H = 0.31'$

$Q = 5.885\ cfs$
$L = 6.8'$
$C = 3.1$

$5.885 = (3.1)(6.9)(H^{1.5})$
$H = 0.423'$

BORTON-LAWSON
LEHIGH VALLEY OFFICE
3893 ADLER PLACE SUITE 100
BETHLEHEM, PA 18017
(484) 821-0470
FAX (484) 821-0474

JOB 2007-2196-00
SHEET NO. ____ OF ____
CALCULATED BY ____ DATE ____
CHECKED BY ____ DATE ____
SCALE ____

• CHECK FOR VELOCITY OF FLOW @ 25 YR STORM

$Q = 4.847$ cfs
$A = (0.5)(0.174')(21.5' + 22.5')$
$= 3.828$ SF

$V = Q/A \quad V = \frac{4.847}{3.828} = 1.27$ Fps

$Q = 4.847$ cfs
$A = (0.5)(.272')(11' + 12.63')$
$= 3.214$ SF

$V = \frac{4.847}{3.214} = 1.51$ fps

$Q = 4.847$ cfs
$A = (0.5)(0.375')(6.9' + 9.15')$
$= 3.009$ SF

$V = \frac{4.847}{3.009} = 1.61$ Fps

• CHECK FOR VELOCITY OF FLOW @ 100 YR STORM

$Q = 5.885$ cfs
$A = (0.5)(.198')(21.5' + 22.69')$
$= 4.375$ SF

$V = \frac{5.885}{4.375} = 1.35$ Fps

$Q = 5.885$ cfs
$A = (0.5)(0.31')(11' + 12.86')$
$= 3.70$ SF

$V = \frac{5.885}{3.70} = 1.59$ Fps

$Q = 5.885$ cfs
$A = (0.5)(.423')(6.9' + 9.44')$
$= 3.46$ SF

$V = \frac{5.885}{3.46} = 1.70$ fps

★ ALL VELOCITIES ABOVE ARE LESS THAN R-2 AND R-3 MAXIMUM PERMISSIBLE VELOCITIES IN PA DEP MANUAL. R-2/R-3 SIZES EQUIVALENT TO RIVER ROCK SIZES.

BORTON-LAWSON
LEHIGH VALLEY OFFICE
3893 ADLER PLACE SUITE 100
BETHLEHEM, PA 18017
(484) 821-0470
FAX (484) 821-0474

JOB 2007-2196-00
SHEET NO. ____ OF ____
CALCULATED BY JDR DATE ____
CHECKED BY ____ DATE ____
SCALE No SCALE

INLETS CAPACITY OF PROPOSED INLETS

I-1: 100 YEAR INFLOW (Q) = 5.76 cfs
REQUIRED HEAD (H) PER RATING CURVE = 0.29 FT
ALLOWABLE DEPTH (d) TO WHICH WATER MAY RISE =
244.00' - 242.50' = 1.50' > 0.29' OK

* CONSERVATIVELY CALCULATED WITH ONLY ONE INLET FUNCTIONING

I-2: 100 YEAR INFLOW (Q) = 2.62 cfs
REQUIRED HEAD (H) PER RATING CURVE = 0.17 FT
ALLOWABLE DEPTH (d) TO WHICH WATER MAY RISE =
252.00' - 251.75' = 0.25' > 0.17' OK

Outlet Structure Configuration for: Type M Inlet

Stage 1: Grate Inlet

Crest Elevation = 0 feet
Effective Perimeter = 12 feet
Effective Flow Area = 8 square feet

Basin Rating Curve

Basin Water Elevation	Basin Outflow (cfs)	Riser Box Water Elevation	Tailwater Elevation (ft)	Outfall Culvert Control	Outfall Culvert Override?
0.00	0.00	N/A	N/A	N/A	N/A
0.05	0.42	N/A	N/A	N/A	N/A
0.10	1.18	N/A	N/A	N/A	N/A
0.15	2.16	N/A	N/A	N/A	N/A
0.20	3.33	N/A	N/A	N/A	N/A
0.25	4.65	N/A	N/A	N/A	N/A
0.30	6.11	N/A	N/A	N/A	N/A
0.35	7.70	N/A	N/A	N/A	N/A
0.40	9.41	N/A	N/A	N/A	N/A
0.45	11.23	N/A	N/A	N/A	N/A
0.50	13.15	N/A	N/A	N/A	N/A
0.55	15.17	N/A	N/A	N/A	N/A
0.60	17.29	N/A	N/A	N/A	N/A
0.65	19.49	N/A	N/A	N/A	N/A
0.70	21.79	N/A	N/A	N/A	N/A
0.75	24.16	N/A	N/A	N/A	N/A
0.80	26.62	N/A	N/A	N/A	N/A
0.85	29.15	N/A	N/A	N/A	N/A
0.90	31.76	N/A	N/A	N/A	N/A
0.95	34.45	N/A	N/A	N/A	N/A
1.00	37.20	N/A	N/A	N/A	N/A

Appendix IV

NPDES/Environmental Testing

WORKSHEET 4. - CHANGE IN RUNOFF VOLUME FOR 2-YR STORM EVENT

PROJECT: Tee garden Parking Lot (120 x 60)
Drainage Area: 0.17 (acres)
2-Year Rainfall: 3.16 in. *Region 4 New PENNDOT

Total Site Area: 0.17 acres
Protected Site Area: 0.00 acres
Managed Area: 0.17 acres

Existing Conditions:

Cover Type/Condition	Soil Type	Area (sf)	Area (ac)	CN	S	Ia (0.2*S)	Q Runoff[1] (in)	Runoff Volume[2] (ft^3)
Woodland		0			0.00	0.00	3.16	0.00
Meadow		0			0.00	0.00	3.16	0.00
Meadow (20% of Imp.)		0			0.00	0.00	3.16	0.00
Impervious	N/A	7200	0.17	98.00	0.20	0.04	2.93	1756.69
		0			0.00	0.00	3.16	0.00
		0			0.00	0.00	3.16	0.00
		0			0.00	0.00	3.16	0.00
		0			0.00	0.00	3.16	0.00
TOTAL:		7200	0.17					1756.69

Developed Conditions:

Cover Type	Soil Type	Area (sf)	Area (ac)	CN	S	Ia (0.2*S)	Q Runoff[1] (in)	Runoff Volume[2] (ft^3)
Woodland		0			0.00	0.00	3.16	0.00
Meadow		0			0.00	0.00	3.16	0.00
Impervious		0			0.00	0.00	3.16	0.00
Lawn	B	7200	0.17	61.00	6.39	1.28	0.43	256.65
		0			0.00	0.00	3.16	0.00
		0			0.00	0.00	3.16	0.00
		0			0.00	0.00	3.16	0.00
		0			0.00	0.00	3.16	0.00
		0			0.00	0.00	3.16	0.00
TOTAL:		7200	0.17					256.65

2-Year Volume Increase (cubic feet):	-1500.04

2-Year Volume Increase = Developed Conditions Runoff Volume - Existing Conditions Runoff Volume

1. Runoff (in) = $Q = (P-0.2S)^2 / (P+0.8S)$ where
   P = 2-Year Rainfall (in)
   S = (1000/CN) - 10
2. Runoff Volume (CF) = Q x Area x 1/12 x 43,560 ft^2/acres
   Q = Runoff (in)
   Area = Land use area (sq. ft)

Note: Runoff Volume must be calculated for EACH land use type and soil.
The use of a weighted CN value for volume calculations is not acceptable.

* NPDES REDUCTION DUE TO POROUS PAVEMENT INSTALLATION

Environmental Management & Consulting, Inc.

INFILTRATION TEST REPORT FOR ON-LOT DISPOSAL OF STORMWATER

Applicant/Client: **Borton-Lawson**

Date of Test: **7/22/2009**

Site Address/Location.: **Teegarden Park**

Municipality: **Tredyffrin Twp.**

Person Conducting Test: **Mark A. Bryan**

County: **Chester**

Weather Conditions: **Sunny**
40°+
Dry last 24 Hours

Location: **SW2**
(Near Parking Lot)

Test Method: Double-Ring Infiltrometer

Profile Descriptions:

Horizon	Depth (in.)	Description
SW1		
A	0-6	Dark Brown silt loam, weak granular, very friable, gradual
B1	6-15	Dark Brown silt loam, moderate subangular blocky, friable, clear
B2	15-56	Light Brown Silt Loam, moderate subangular blocky, friable, clear, few faint mottles (not limiting)
C	56-96	Grey/Brown Variegated Silt Loam, weak subangular blocky, very friable

No limiting zone encountered to 96"

Hole No.	Test Depth (in.)	Start Depth (in.)	Drop (in.) 1	2	3	4	5	6	7	8
SW2A	72	12	3/4	3/4	5/8	1/2				
Time:			12:20	12:50	1:20	1:50				
SW2B	72	12	1/2	1/2	3/8	3/8				
Time:			12:20	12:50	1:20	1:50				

Calculation of Infiltration Rate:

Hole No.	Drop in Final Per.	Reading Interval	Minutes/ Inch	Inches/ Hour
SW2A	1/2	30	60	1
SW2B	3/8	30	80.00	3/4

Final Avg. (Inches/Hour)

0.875

Environmental Management & Consulting, Inc.

INFILTRATION TEST REPORT FOR ON-LOT DISPOSAL OF STORMWATER

Applicant/Client: **Borton-Lawson**

Date of Test: **7/22/2009**

Site Address/Location.: **Teegarden Park**

Municipality: **Tredyffrin Twp.**

Person Conducting Test: **Mark A. Bryan**

County: **Chester**

Weather Conditions: **Sunny**
40°+
Dry last 24 Hours

Location: **SW1**
(Near Power Line Towers)

Test Method: Double-Ring Infiltrometer (Not Conducted due to shallow L.Z)

Profile Descriptions:

Horizon	Depth (in.)	Description
SW1		
A	0-6	Dark Brown silt loam, moderate granular, very friable, gradual
B1	6-10	Dark Brown silt loam, moderate granular, very friable, clear, common faint mottles throughout
B2	10-28	Yellow/Brown Silt Loam, moderate subangular blocky, very friable, clear, common faint mottles throughout
C	28-60	Brown Silt Loam, weak subangular blocky, very friable, 10-20% coarse frag., water @ 40"

Seasonal high water table limiting zone encountered @ 6", observed water table @ 40"

Hole No.	Test Depth (in.)	Start Depth (in.)	Drop (in.)							
			1	2	3	4	5	6	7	8
SW1										
Time:										
Time:										

Calculation of Infiltration Rate:

Hole No.	Drop in Final Per.	Reading Interval	Minutes/ Inch	Inches/ Hour
SW1				

Appendix V

Plan Sheets (included under separate cover)

PRELIMINARY LAND DEVELOPMENT DRAWINGS
FOR
TREDYFFRIN TOWNSHIP
TEEGARDEN PARK

TREDYFFRIN TOWNSHIP, CHESTER COUNTY, PENNSYLVANIA

PA ONE CALL SERIAL NO. 20091770296 (TREDYFFRIN TWP.)

CALL BEFORE YOU DIG!
PENNSYLVANIA LAW REQUIRES
3 WORKING DAYS NOTICE FOR
CONSTRUCTION PHASE AND 10 WORKING
DAYS IN DESIGN STAGE – STOP CALL
Pennsylvania One Call System, Inc.
1–800–242–1776

THE FOLLOWING IS A LIST OF UTILITIES WHICH MAY HAVE UNDERGROUND FACILITIES IN THE PROJECT AREA:

COMCAST CABLE COMMUNICATIONS INC
1004 CORNERSTONE BLVD
DOWNINGTOWN, PA 19335
CONTACT: LEE MCGARRITY

PECO ENERGY
C/O STS LLC
3628 HORIZON DR
KING OF PRUSSIA, PA 19406
CONTACT: WAYNE VINCENT

TREDYFFRIN TOWNSHIP
1100 DUPORTAIL RD
BERWYN, PA 19312
CONTACT: STEPHEN F. NORCINI

AQUA PENNSYLVANIA INC
762 W LANCASTER AVE
BRYN MAWR, PA 19010
CONTACT: STEVE PIZZI

VERIZON PENNSYLVANIA INC
SIXTH FLOOR
900 RACE STREET
PHILADELPHIA, PA 19107
CONTACT; SUZETTE WALKER

ABOVENET COMMUNICATIONS INC
337 CIRCLE O PROGRESS DR
POTTSTOWN, PA 19464
CONTACT: CHRIS RICCIUTI

SUNOCO PIPELINE LP
525 FRITZTOWN RD
SINKING SPRINGS, PA 19608
CONTACT: ONE CALL DEPARTMENT

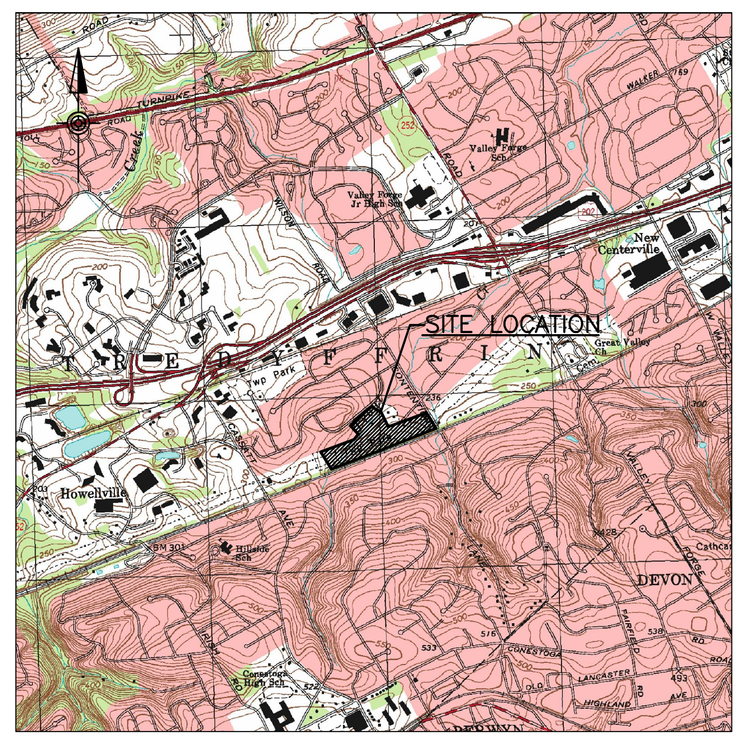

LOCATION MAP
SOURCE: USGS VALLEY FORGE QUADRANGLE

2000' 0 2000' 4000'

DRAWING LIST

CS1	COVER SHEET
CS2	LEGEND, ABBREVIATIONS AND SYMBOLS
C100	EXISTING CONDITIONS PLAN
C300	GRADING AND DRAINAGE PLAN
C401	EROSION AND SEDIMENTATION CONTROL PLAN
C402	EROSION AND SEDIMENTATION CONTROL PLAN
C901	SITE DETAILS
C902	E&S DETAILS
C903	E&S NOTES

SEALS

GENERAL NOTES:

1) ATTN: TOWNSHIP ENGINEER TO OWNER/APPLICANT:
TREDYFFRIN TOWNSHIP
1100 DUPORTAIL ROAD
BERWYN, PA 19312–1079

2) EXISTING SEPTIC INFORMATION SHOWN

3) CONTRACTOR TO FIELD VERIFY ALL LOCATIONS AND ELEVATIONS OF UTILITIES PRIOR TO CONSTRUCTION.

4) ALL MATERIALS TO BE IN ACCORDANCE WITH PENNDOT SECTION 408 SPECIFICATIONS.

5) NO NEW ON–SITE SEPTIC OR WATER IS PROPOSED FOR THIS LAND DEVELOPMENT PLAN.

6) THE SUBJECT TRACT IS LOCATED IN ZONE

7) EXISTING PLAN FEATURES SHOWN PER THE FOLLOWING:

"PLAN OF PROPERTY FOR TREDYFFRIN PARK" PREPARED BY G.D. HOUTMAN & SON, INC., 112 WEST FRONT STREET, MEDIA, PENNSYLVANIA 19063, (610) 565–6363.

SUPPLEMENTED BY SURVEY DONE BY JEFFREY P. TURNER, P.L.S., 3941 CROSSKEYS ROAD, COLLEGEVILLE, PENNSYLVANIA 19426, (610) 489–7797.

NORTHEAST PENNSYLVANIA
613 Baltimore Drive, Ste. 300
Wilkes–Barre, PA 18702–7903
v. 570.821.1999
f. 570.821.1990

Borton Lawson
ENGINEERING
ARCHITECTURE
www.borton–lawson.com

LEHIGH VALLEY OFFICE
3893 Adler Place, Ste. 100
Bethlehem, PA 18017
v. 484.821.0470
f. 484.821.0474

B/L PROJECT NUMBER: 2007–2196–00
ISSUE DATE: NOVEMBER 6, 2009
RE–ISSUE DATE: DECEMBER 29. 2009

LEGEND, ABBREVIATIONS AND SYMBOLS

EXISTING	ITEM	PROPOSED
	PROPERTY LINE	
	ROADWAY CENTERLINE	
	EASEMENT LINE	
	CURB	
X X X X	FENCE	X X X X
	GUIDERAIL	T T
	EOP	
	MINOR CONTOUR	
XXX	MAJOR CONTOUR	XXX
X" G	GAS LINE	X" G
OHE	OVERHEAD ELEC	OHE
X" W	WATER LINE	X" W
	SANITARY LINE	
	SANITARY FORCE MAIN LINE	
	STORM PIPE	
	DRAINAGE SWALE	
xXXX.XX	SPOT ELEVATION	xXXX.XX
	WETLAND WITH BUFFER	
	CONCRETE AREA	
	STORM INLET	
	MANHOLE	
	UTILITY VALVE	
	BOLLARD	
	UTILITY POLE	
	SIGN	
	FIRE HYDRANT	
	LIGHT POLE	

- ADJOINING / INTERIOR PROPERTY LINE
- LEGAL RIGHT-OF-WAY
- MUNICIPAL BOUNDARY LINE
- ZONING BOUNDARY LINE
- SETBACK LINE
- EDGE OF WATER
- FEMA 100 YR FLOODPLAIN LINE
- ORDINARY HIGH WATER LIMIT LINE
- FEMA 100 YR FLOODWAY LINE
- MAILBOX
- SIGNAL MAST ARM
- DECIDUOUS TREE
- CONIFEROUS TREE
- SHRUB
- BUILDING

EROSION AND SEDIMENTATION CONTROL

- SOIL TYPE BOUNDARY LINE
- XxX — SOIL TYPE DESIGNATION
- RCE — PROPOSED ROCK CONSTRUCTION ENTRANCE
- I.P. — FILTER BAG INLET PROTECTION (SEE STANDARD CONSTRUCTION DETAILS #28 AND 28a)
- I.P. — STONE OR CONC. BLOCK INLET PROTECTION (SEE STANDARD CONSTRUCTION DETAILS #29 AND 30)
- LIMIT OF DISTURBANCE/CONSTRUCTION
- EROSION CONTROL MATTING (ALL SLOPES 3:1 OR GREATER)
- ROCK APRON
- ROCK FILTERS
- RIPRAP AREA
- PROTECTIVE FENCE
- FF18 — 18" FILTER FABRIC FENCE
- FF30 — 30" FILTER FABRIC FENCE
- SSF — SUPER FILTER FABRIC FENCE
- CSS-XX — COMPOSTED SILT SOCK
- STAGING AREA — STAGING AREA
- TOPSOIL STOCKPILE — TOPSOIL STOCKPILE

Δ	DELTA
ABDN	ABANDON
ABUT	ABUTMENT
APPROX	APPROXIMATE
B/24"	BLUE 24"
B/4"	BLUE 4"
BC	BOTTOM CURB
BCBC	BITUMINOUS CONCRETE BASE COARSE
BLDG	BUILDING
BM	BENCH MARK
BOB	BOTTOM OF BANK
BRG	BEARING
BVCE	BEGIN VERTICAL CURVE ELEVATION
BVCS	BEGIN VERTICAL CURVE STATION
BW	BOTTOM WALL
CBL	CABLE
CHD	CHORD
CHWR	CHILLED WATER RETURN
CHWS	CHILLED WATER SOURCE
CJ	CONTROL JOINT
CL	CENTER LINE
CMP	CORRUGATED METAL PIPE
CMU	CONCRETE MASONRY UNIT
CO	CLEANOUT
COMM	COMMUNICATION
CONC	CONCRETE
COND	CONDENSATE
CPP	CORRUGATED PLASTIC PIPE
CY	CUBIC YARDS
DB	DEED BOOK
DIA	DIAMETER
DIR	DIRECTION
DN	DOWN
DWGS	DRAWINGS
DY/4"	DOUBLE YELLOW 4"
E & S	EROSION AND SEDIMENTATION CONTROL
EA	EACH
EJ	EXPANSION JOINT
EL	ELEVATION
EOP	EDGE OF PAVE
EOS	EDGE OF SHOULDER
EVCE	END VERTICAL CURVE ELEVATION
EVCS	END VERTICAL CURVE STATION
FES	FLARED END SECTION
FF	FINISH FLOOR
FG	FINISH GRADE
FH	FIRE HYDRANT
FM	FORCE MAIN
FND	FOUND
FT	FEET
GND	GROUND
GPM	GALLONS PER MINUTE
GV	GAS VALVE
HC	HYDRAULIC CONDUCTIVITY
HOP	HIGHWAY OCCUPANCY PERMIT
HT	HEIGHT
ID	INSIDE DIAMETER
IN	INCHES
INV	INVERT
JB	JUNCTION BOX
LAT	LATITUDE
LF	LINEAL FEET
LOD	LIMIT OF DISTURBANCE
LONG	LONGITUDE
LP	LIGHT POLE
LT	LEFT
LVC	LENGTH VERTICAL CURVE
MAX	MAXIMUM
MB	MAILBOX
MFR	MANUFACTURER
MH	MANHOLE
MIN	MINIMUM
MON	MONUMENT
MPT	MAINTENANCE AND PROTECTION OF TRAFFIC
N/F	NOW OR FORMERLY
N=	NORTHING
NPDES	NATIONAL POLLUTANT DISCHARGE ELIMINATION SYSTEM
OC	ON CENTER
OD	OUTSIDE DIAMETER
OFF	OFFSET
OH	OVERHEAD
OHE	OVERHEAD ELECTRIC
OHW	OVERHEAD WIRE
PCSM	POST CONSTRUCTION STORM WATER MANAGEMENT
PG	PAGE
PI	POINT OF INTERSECTION
PL	PROPERTY LINE
PNT	POINT
POB	POINT OF BEGINNING
PPC	PREPAREDNESS PREVENTION AND CONTINGENCY
PRC	POINT REVERSE CURB
PRV	PRESSURE REDUCING VALVE
PT	POINT TANGENCY
PVC	POINT OF VERTICAL CURVE
PVI	POINT OF VERTICAL INTERSECTION
R/W	RIGHT-OF-WAY
R=	RADIUS
RA	ROCK APRON
RCP	REINFORCED CONCRETE PIPE
RD	ROAD
RR	RAILROAD
RTE	ROUTE
S=	SLOPE
SAN	SANITARY
SEG	SEGMENT
SF	SQUARE FEET
SCH	SCHEDULE
SLCPP	SMOOTH LINE CORRUGATED POLYETHYLENE PIPE
SR	STATE ROUTE
STL	STEEL
STM	STEAM
SY	SQUARE YARDS
T=	TANGENT
TB	TEST BORING
TC	TOP CURB
TEL	TELEPHONE
TEMP	TEMPORARY
TP	TEST PIT
TWP	TOWNSHIP
TW	TOP WALL
TYP	TYPICAL
UG	UNDERGROUND
UTIL	UTILITIES
W	WATER
W/24"	WHITE 24"
W/4"	WHITE 4"
WSE	WATER SURFACE ELEVATION
WV	WATER VALVE
WWTP	WASTE WATER TREATMENT PLANT
YR	YEAR

Borton Lawson
ENGINEERING
ARCHITECTURE
www.borton-lawson.com

Northeast Pennsylvania
613 Baltimore Drive
Suite 300
Wilkes-Barre, PA. 18702
Voice: 570-821-1999
Fax: 570-821-1990

Lehigh Valley
3893 Adler Place
Suite 100
Bethlehem, PA. 18017
Voice: 484-821-0470
Fax: 484-821-0474

REVISIONS

DATE: 11/06/2009 | DR.BY: EM2
SCALE: 1"=20' | CH.BY:

LEGEND, ABBREVIATIONS AND SYMBOLS

TEEGARDEN PARK

TREDYFRIN TOWNSHIP, CHESTER COUNTY, PENNSYLVANIA

PROJECT NO. 2007-2196-00

DRAWING NO. CS2

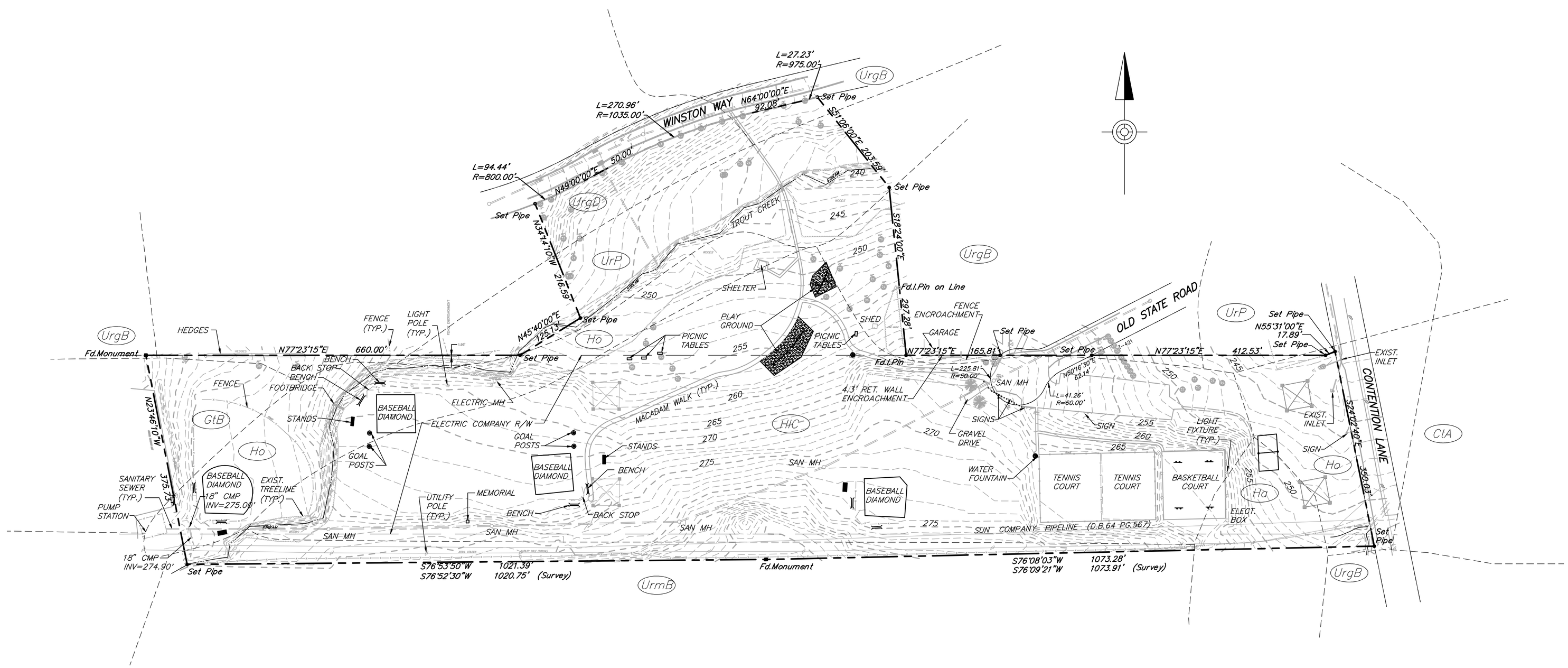

NOTE:

INFORMATION PROVIDED BY TREDYFFRIN TOWNSHIP TO BORTON LAWSON. SUBJECT PARCEL IS OUTSIDE TOWNSHIP'S SUPPLIED FLOODPLAIN BOUNDARY.

PA ONE CALL SERIAL NO. 20091770296 (TREDYFFRIN TWP.)

CALL BEFORE YOU DIG!
PENNSYLVANIA LAW REQUIRES
3 WORKING DAYS NOTICE FOR
CONSTRUCTION PHASE AND 10 WORKING
DAYS IN DESIGN STAGE – STOP CALL
Pennsylvania One Call System, Inc.
1–800–242–1776

SOIL DATA:

SOIL TYPES ARE TAKEN FROM USDA SOIL SURVEY OF CHESTER COUNTY

- CtA — CtA = CONESTOGA SILT LOAM 0–3 PERCENT SLOPES
- CtB — CtB = CONESTOGA SILT LOAM 3–8 PERCENT SLOPES
- Ha — Ha = HATBORO SILT LOAM 0–3 PERCENT SLOPES
- HlC — HlC = HOLLINGER SILT LOAM 8–15 PERCENT SLOPES
- Ho — Ho = HOLLY SILT LOAM 0–3 PERCENT SLOPES
- UrgB — UrgB = URBAN LAND – CONESTOGA COMPLEX 0–8 PERCENT SLOPES
- UrgD — UrgD = URBAN LAND – CONESTOGA COMPLEX 8–25 PERCENT SLOPES
- UrmD — UrmB = URBAN LAND – GLENELG COMPLEX 0–8 PERCENT SLOPES
- UrP — UrP = URBAN LAND – HOLLY COMPLEX

100 0 100 200

Borton Lawson
ENGINEERING
ARCHITECTURE
www.borton-lawson.com

Northeast Pennsylvania
613 Baltimore Drive
Suite 300
Wilkes-Barre, PA. 18702
Voice: 570-821-1999
Fax: 570-821-1990

Lehigh Valley
3893 Adler Place
Suite 100
Bethlehem, PA. 18017
Voice: 484-821-0470
Fax: 484-821-0474

REVISIONS

12/29/09	REVISED AS PER TWNSHP ENG.	

DATE: 11/06/2009 DR.BY: EM2
SCALE: 1"=20' CH.BY:

EXISTING CONDITIONS PLAN

TEEGARDEN PARK

TREDYFFRIN TOWNSHIP, CHESTER COUNTY, PENNSYLVANIA

PROJECT NO. 2007-2196-00

DRAWING NO. C100

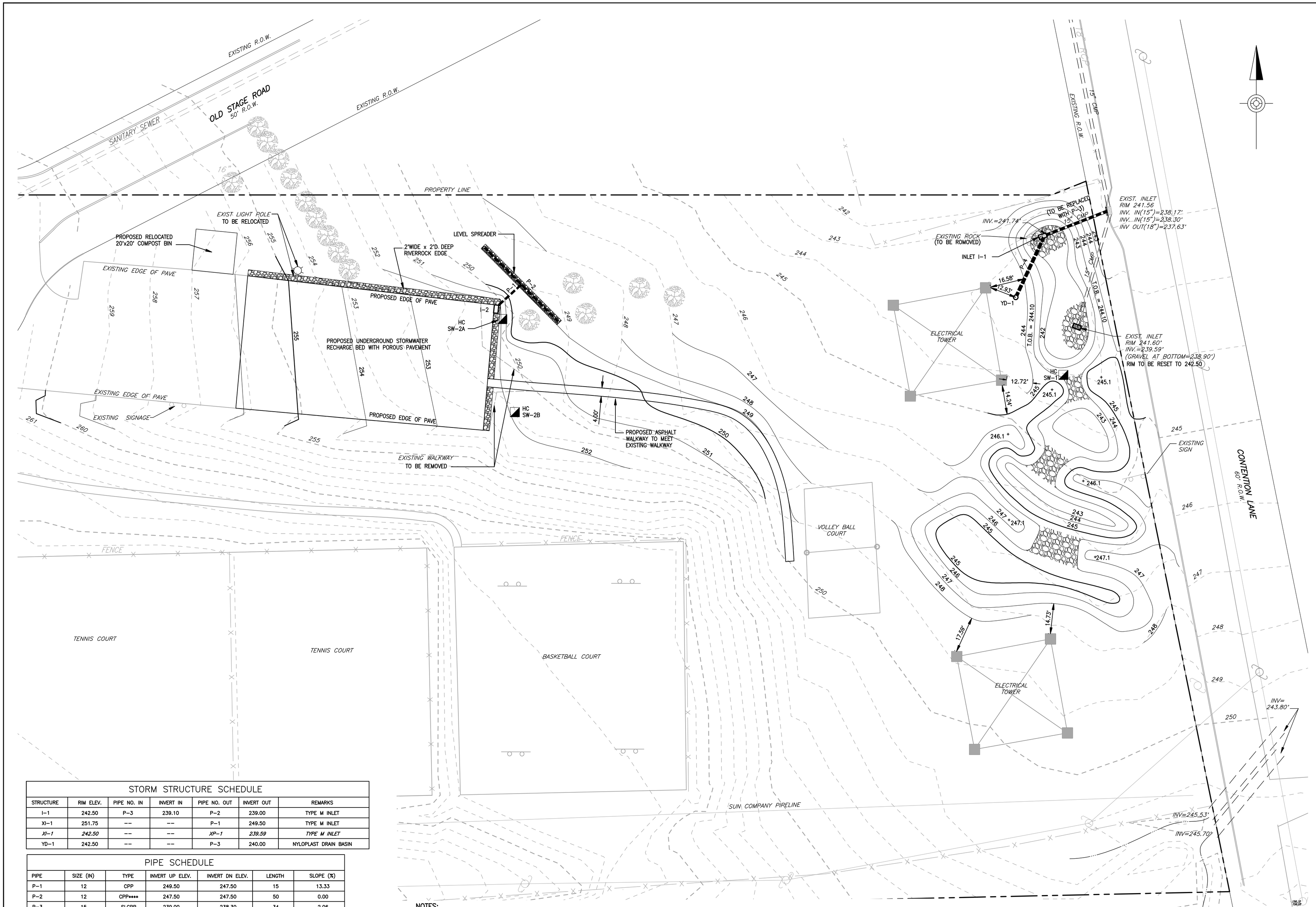

STORM STRUCTURE SCHEDULE

STRUCTURE	RIM ELEV.	PIPE NO. IN	INVERT IN	PIPE NO. OUT	INVERT OUT	REMARKS
I-1	242.50	P-3	239.10	P-2	239.00	TYPE M INLET
XI-1	251.75	--	--	P-1	249.50	TYPE M INLET
XI-1	*242.50*	--	--	*XP-1*	*239.59*	*TYPE M INLET*
YD-1	242.50	--	--	P-3	240.00	NYLOPLAST DRAIN BASIN

PIPE SCHEDULE

PIPE	SIZE (IN)	TYPE	INVERT UP ELEV.	INVERT DN ELEV.	LENGTH	SLOPE (%)
P-1	12	CPP	249.50	247.50	15	13.33
P-2	12	CPP****	247.50	247.50	50	0.00
P-3	15	SLCPP	239.00	238.30	34	2.06
P-4	15	SLCPP	240.00	239.10	33	2.73
XP-1	*15*	*CMP*	*239.59*	*238.17*	*58*	*2.45*

SLCPP: HDPE SMOOTH LINED CORRUGATED POLYETHYLENE PIPE; CPP: HDPE CORRUGATED PLASTIC PIPE; CMP: CORRUGATED METAL PIPE.
CPP*****: PERFORATED CPP

NOTES:

1. LOCATION OF LEVEL SPREADER MAY BE ADJUSTED PER FINAL DESIGN. LEVEL SPREADER MAY BE LOCATED ABOVE GRADIENT TO THE PROPOSED RAIN GARDEN.
2. PRIOR TO FINAL DESIGN/CONSTRUTION, RAIN GARDEN SEPARATION DISTANCES SHALL BE VERIFIED WITH PECO TO ENSURE ADEQUATE SEPARATION DISTANCES ARE PROVIDED ON THE PLAN.

LEGEND:

3"-6" RIVER ROCK
DECORATIVE STONE

GRAPHIC SCALE: 1" = 20'
20 0 20 40

Borton Lawson
ENGINEERING
ARCHITECTURE
www.borton-lawson.com

Northeast Pennsylvania
613 Baltimore Drive
Suite 300
Wilkes-Barre, PA. 18702
Voice: 570-821-1999
Fax: 570-821-1990

Lehigh Valley
3893 Adler Place
Suite 100
Bethlehem, PA. 18017
Voice: 484-821-0470
Fax: 484-821-0474

REVISIONS

12/29/09	REVISED AS PER TWNSHP ENG.
DATE: 11/06/2009	DR.BY: EM2
SCALE: 1"=20'	CH.BY:

GRADING AND DRAINAGE PLAN

TEEGARDEN PARK

TREDYFRIN TOWNSHIP, CHESTER COUNTY, PENNSYLVANIA

PROJECT NO. 2007-2196-00

DRAWING NO. C300

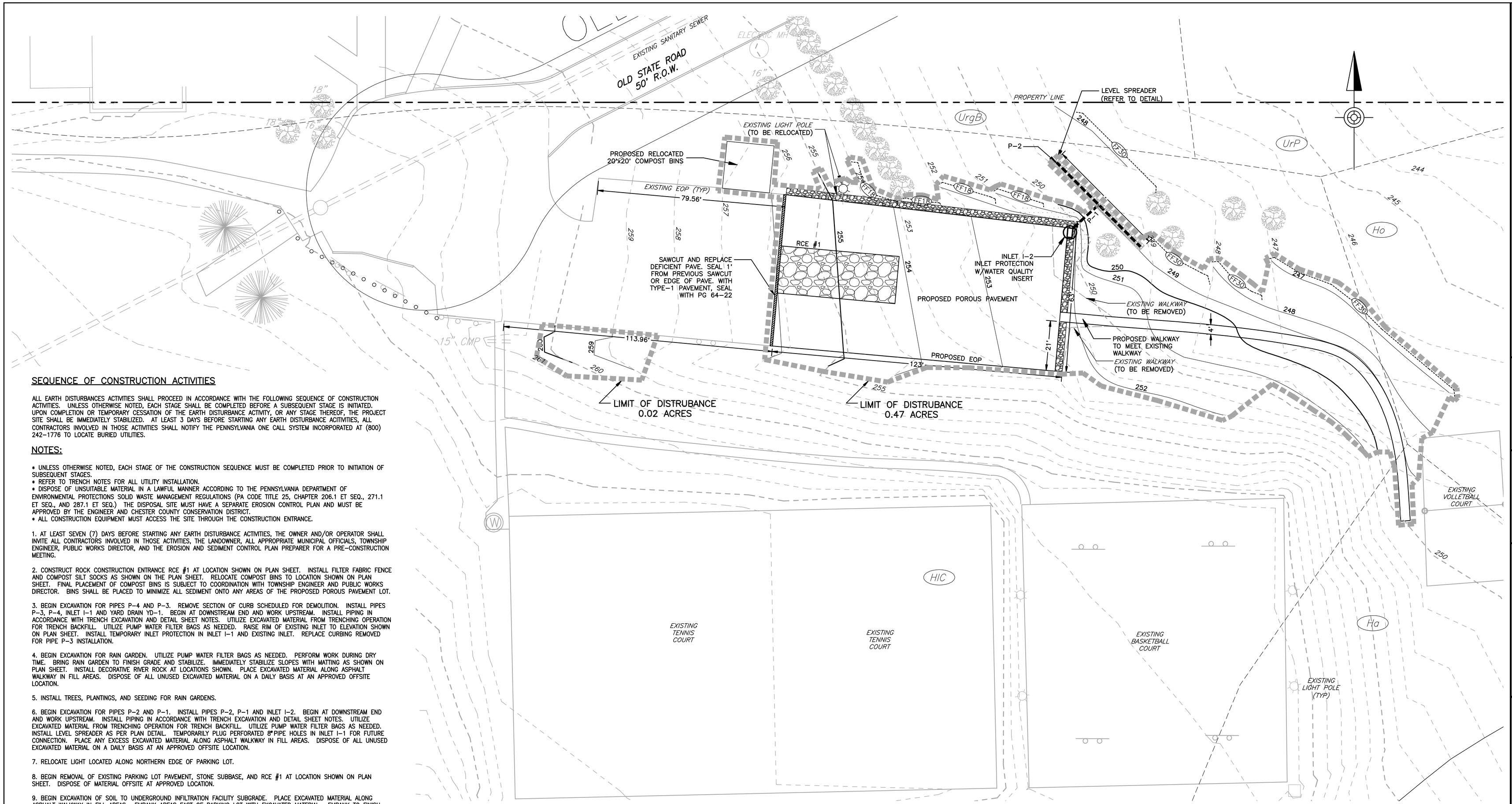

SEQUENCE OF CONSTRUCTION ACTIVITIES

ALL EARTH DISTURBANCES ACTIVITIES SHALL PROCEED IN ACCORDANCE WITH THE FOLLOWING SEQUENCE OF CONSTRUCTION ACTIVITIES. UNLESS OTHERWISE NOTED, EACH STAGE SHALL BE COMPLETED BEFORE A SUBSEQUENT STAGE IS INITIATED. UPON COMPLETION OR TEMPORARY CESSATION OF THE EARTH DISTURBANCE ACTIVITY, OR ANY STAGE THEREOF, THE PROJECT SITE SHALL BE IMMEDIATELY STABILIZED. AT LEAST 3 DAYS BEFORE STARTING ANY EARTH DISTURBANCE ACITIVITIES, ALL CONTRACTORS INVOLVED IN THOSE ACTIVITIES SHALL NOTIFY THE PENNSYLVANIA ONE CALL SYSTEM INCORPORATED AT (800) 242-1776 TO LOCATE BURIED UTILITIES.

NOTES:

- UNLESS OTHERWISE NOTED, EACH STAGE OF THE CONSTRUCTION SEQUENCE MUST BE COMPLETED PRIOR TO INITIATION OF SUBSEQUENT STAGES.
- REFER TO TRENCH NOTES FOR ALL UTILITY INSTALLATION.
- DISPOSE OF UNSUITABLE MATERIAL IN A LAWFUL MANNER ACCORDING TO THE PENNSYLVANIA DEPARTMENT OF ENVIRONMENTAL PROTECTIONS SOLID WASTE MANAGEMENT REGULATIONS (PA CODE TITLE 25, CHAPTER 206.1 ET SEQ., 271.1 ET SEQ., AND 287.1 ET SEQ.) THE DISPOSAL SITE MUST HAVE A SEPARATE EROSION CONTROL PLAN AND MUST BE APPROVED BY THE ENGINEER AND CHESTER COUNTY CONSERVATION DISTRICT.
- ALL CONSTRUCTION EQUIPMENT MUST ACCESS THE SITE THROUGH THE CONSTRUCTION ENTRANCE.

1. AT LEAST SEVEN (7) DAYS BEFORE STARTING ANY EARTH DISTURBANCE ACTIVITIES, THE OWNER AND/OR OPERATOR SHALL INVITE ALL CONTRACTORS INVOLVED IN THOSE ACTIVITIES, THE LANDOWNER, ALL APPROPRIATE MUNICIPAL OFFICIALS, TOWNSHIP ENGINEER, PUBLIC WORKS DIRECTOR, AND THE EROSION AND SEDIMENT CONTROL PLAN PREPARER FOR A PRE-CONSTRUCTION MEETING.

2. CONSTRUCT ROCK CONSTRUCTION ENTRANCE RCE #1 AT LOCATION SHOWN ON PLAN SHEET. INSTALL FILTER FABRIC FENCE AND COMPOST SILT SOCKS AS SHOWN ON THE PLAN SHEET. RELOCATE COMPOST BINS TO LOCATION SHOWN ON PLAN SHEET. FINAL PLACEMENT OF COMPOST BINS IS SUBJECT TO COORDINATION WITH TOWNSHIP ENGINEER AND PUBLIC WORKS DIRECTOR. BINS SHALL BE PLACED TO MINIMIZE ALL SEDIMENT ONTO ANY AREAS OF THE PROPOSED POROUS PAVEMENT LOT.

3. BEGIN EXCAVATION FOR PIPES P-4 AND P-3. REMOVE SECTION OF CURB SCHEDULED FOR DEMOLITION. INSTALL PIPES P-3, P-4, INLET I-1 AND YARD DRAIN YD-1. BEGIN AT DOWNSTREAM END AND WORK UPSTREAM. INSTALL PIPING IN ACCORDANCE WITH TRENCH EXCAVATION AND DETAIL SHEET NOTES. UTILIZE EXCAVATED MATERIAL FROM TRENCHING OPERATION FOR TRENCH BACKFILL. UTILIZE PUMP WATER FILTER BAGS AS NEEDED. RAISE RIM OF EXISTING INLET TO ELEVATION SHOWN ON PLAN SHEET. INSTALL TEMPORARY INLET PROTECTION IN INLET I-1 AND EXISTING INLET. REPLACE CURBING REMOVED FOR PIPE P-3 INSTALLATION.

4. BEGIN EXCAVATION FOR RAIN GARDEN. UTILIZE PUMP WATER FILTER BAGS AS NEEDED. PERFORM WORK DURING DRY TIME. BRING RAIN GARDEN TO FINISH GRADE AND STABILIZE. IMMEDIATELY STABILIZE SLOPES WITH MATTING AS SHOWN ON PLAN SHEET. INSTALL DECORATIVE RIVER ROCK AT LOCATIONS SHOWN. PLACE EXCAVATED MATERIAL ALONG ASPHALT WALKWAY IN FILL AREAS. DISPOSE OF ALL UNUSED EXCAVATED MATERIAL ON A DAILY BASIS AT AN APPROVED OFFSITE LOCATION.

5. INSTALL TREES, PLANTINGS, AND SEEDING FOR RAIN GARDENS.

6. BEGIN EXCAVATION FOR PIPES P-2 AND P-1. INSTALL PIPES P-2, P-1 AND INLET I-2. BEGIN AT DOWNSTREAM END AND WORK UPSTREAM. INSTALL PIPING IN ACCORDANCE WITH TRENCH EXCAVATION AND DETAIL SHEET NOTES. UTILIZE EXCAVATED MATERIAL FROM TRENCHING OPERATION FOR TRENCH BACKFILL. UTILIZE PUMP WATER FILTER BAGS AS NEEDED. INSTALL LEVEL SPREADER AS PER PLAN DETAIL. TEMPORARILY PLUG PERFORATED 8" PIPE HOLES IN INLET I-1 FOR FUTURE CONNECTION. PLACE ANY EXCESS EXCAVATED MATERIAL ALONG ASPHALT WALKWAY IN FILL AREAS. DISPOSE OF ALL UNUSED EXCAVATED MATERIAL ON A DAILY BASIS AT AN APPROVED OFFSITE LOCATION.

7. RELOCATE LIGHT LOCATED ALONG NORTHERN EDGE OF PARKING LOT.

8. BEGIN REMOVAL OF EXISTING PARKING LOT PAVEMENT, STONE SUBBASE, AND RCE #1 AT LOCATION SHOWN ON PLAN SHEET. DISPOSE OF MATERIAL OFFSITE AT APPROVED LOCATION.

9. BEGIN EXCAVATION OF SOIL TO UNDERGROUND INFILTRATION FACILITY SUBGRADE. PLACE EXCAVATED MATERIAL ALONG ASPHALT WALKWAY IN FILL AREAS. EMBANK AREAS EAST OF PARKING LOT WITH EXCAVATED MATERIAL. EMBANK TO FINISH GRADE AND STABILIZE WITH SEED, MULCH, AND MATTING AS SHOWN ON PLAN SHEET.

10. COMPLETE EXCAVATION OF UNDERGROUND INFILTRATION FACILITY. DISPOSE OF ALL UNUSED EXCAVATED MATERIAL ON A DAILY BASIS AT AN APPROVED OFFSITE LOCATION.

11. SCARIFY SUBGRADE AND PLACE APPROVED GEOTEXTILE. DO NOT COMPACT SUBGRADE WHILE CONSTRUCTING UNDERGROUND FACILITY. CONSTRUCT UNDERGROUND INFILTRATION FACILITY AS PER PLAN DETAILS. REMOVE TEMPORARY PLUGS IN INLET I-2 AND INSTALL 8" PERFORATED PIPES. CONSTRUCT RIVER ROCK OVERFLOW AS DETAILED ON DETAIL SHEET.

12. INSTALL POROUS PAVEMENT AS PER MANUFACTURERS RECOMMENDATIONS.

13. COMPLETE GRADING AROUND SITE AND STABILIZE WITH APPROPRIATE SEED AND MULCH

14. REMOVE TEMPORARY CONTROLS, INCLUDING SILT SOCKS, ONCE PERMANENT CONTROLS ARE ESTABLISHED AND SITE STABILIZATION IS ACHIEVED, SITE SHALL BE CONSIDERED PERMANENTLY STABILIZED WHEN A MINIMUM UNIFORM 70% VEGETATIVE COVER OF EROSION RESISTANT PERENNIAL SPECIES EXISTS ON ALL DISTURBED AREAS.

TRENCH EXCAVATION NOTES:

1. LIMIT PIPE EXCAVATION TO THE AMOUNT OF PIPE THAT CAN BE CONSTRUCTED IN ONE DAY.

2. PLACE EXCAVATED MATERIAL UPSLOPE OF PIPE TRENCH.

3. NO MORE THAN 50 LINEAR FEET OF OPEN TRENCH SHOULD EXIST WHEN UTILITY INSTALLATION CEASES AT THE END OF THE WORKDAY.

4. BACKFILL AND STABILIZE TRENCHES AT THE END OF EACH WORK DAY. STABILIZE WITH SUBBASE MATERIAL IN PAVEMENT AREAS AND WITH SEED AND MULCH IN VEGETATED AREAS.

5. MAINTAIN PUMPED WATER FILTER BAG ON SITE TO DEWATER TRENCHES AS NECESSARY. FILTER BAGS MUST DISCHARGE TO A WELL VEGETATED AREA AT A GRADE LESS THAN 5%.

SOIL DATA:

SOIL TYPES ARE TAKEN FROM USDA SOIL SURVEY OF CHESTER COUNTY

- CtA — CtA = CONESTOGA SILT LOAM 0-3 PERCENT SLOPES
- Ha — Ha = HATBORO SILT LOAM 0-3 PERCENT SLOPES
- HIC — HIC = HOLLINGER SILT LOAM 8-15 PERCENT SLOPES
- Ho — Ho = HOLLY SILT LOAM 0-3 PERCENT SLOPES
- UrgB — UrgB = URBAN LAND - CONESTOGA COMPLEX 0-8 PERCENT SLOPES
- UrP — UrP = URBAN LAND - HOLLY COMPLEX

NOTES:

1. REFER TO DWG NO. CS2 FOR LEGENDS, ABBREVIATIONS AND SYMBOLS.

2. TOTAL SITE LIMIT OF DISTURBANCE 0.90 ACRES

3. FINAL PLACEMENT OF COMPOST BINS IS SUBJECT TO COORDINATION WITH TOWNSHIP ENGINEER AND PUBLIC WORKS DIRECTOR. BINS SHALL BE PLACED TO MINIMIZE ALL SEDIMENT ONTO ANY AREAS OF THE PROPOSED POROUS PAVEMENT LOT.

GRAPHIC SCALE: 1" = 20'

20 0 20 40

Borton Lawson
ENGINEERING
ARCHITECTURE
www.borton-lawson.com

Northeast Pennsylvania
613 Baltimore Drive
Suite 300
Wilkes-Barre, PA. 18702
Voice: 570-821-1999
Fax: 570-821-1990

Lehigh Valley
3893 Adler Place
Suite 100
Bethlehem, PA. 18017
Voice: 484-821-0470
Fax: 484-821-0474

REVISIONS

12/29/09	REVISED AS PER TWNSHP ENG.
DATE: 11/06/2009	DR.BY: EM2
SCALE: 1"=20'	CH.BY:

EROSION AND SEDIMENTATION CONTROL PLAN

TEEGARDEN PARK

TREDYFFRIN TOWNSHIP, CHESTER COUNTY, PENNSYLVANIA

PROJECT NO. 2007-2196-00

DRAWING NO. C401

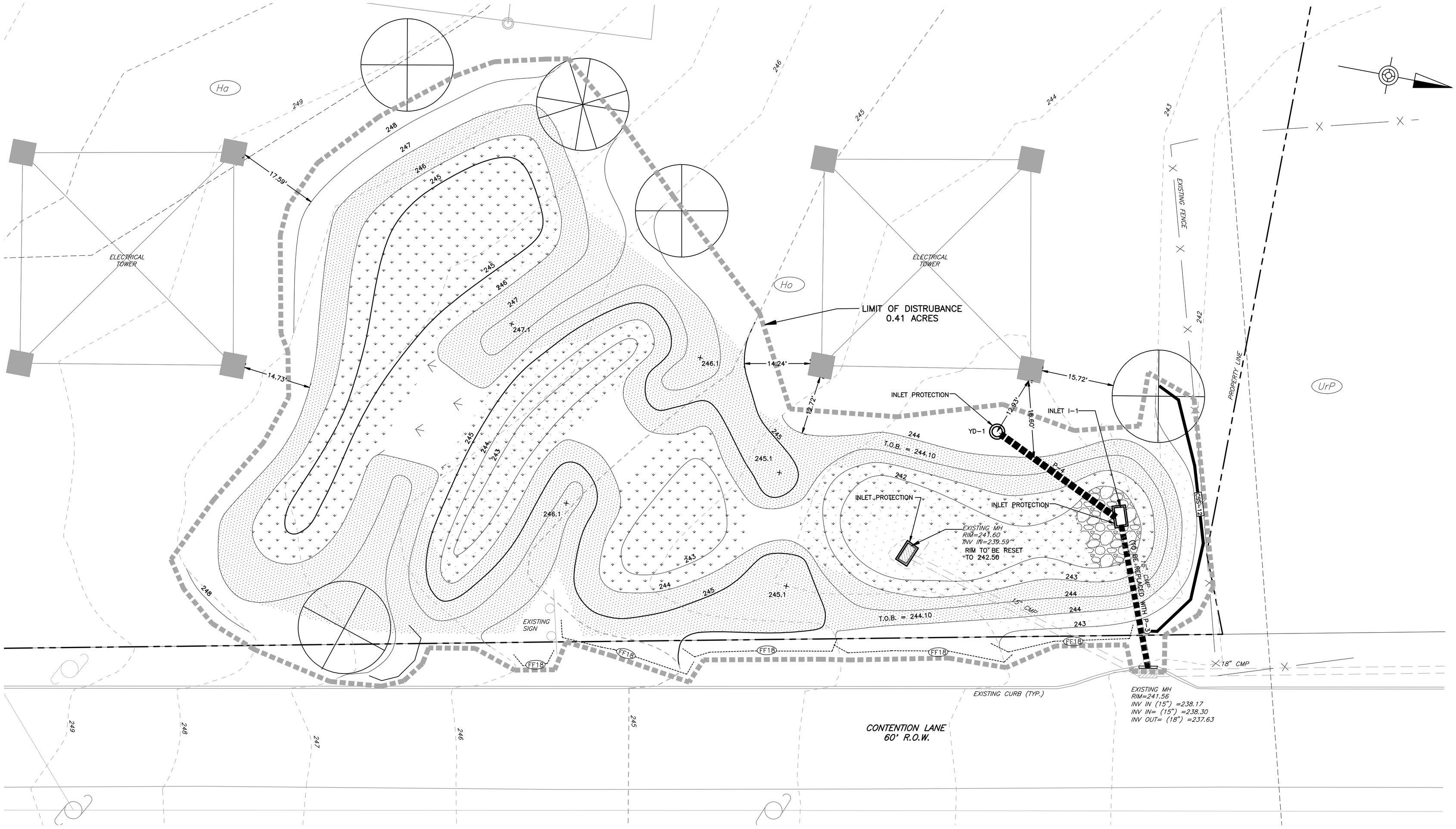

LANDSCAPING NOTES AND VEGETATION LIST:

1. ALL TREES MUST BE FLOWERING OR SMALLER VARIETY TREES. TYPICALLY 25' MATURE HEIGHT OR LESS.

2. THE FOLLOWING VEGETATION LIST IS TO BE CONSIDERED FOR THE RAIN GARDENS. ADDITIONAL SPECIES AND VARIOUS QUANTITIES MAY BE ADJUSTED PRIOR TO ISSUANCE OF CONSTRUCTION PLANS. THE LIST IS AS FOLLOWS:
   1. MINIIMUM OF 8 RIVERBIRCH
   2. MINIMUM OF 32 RED CHOKEBERRY
   3. MINIMUM OF 18 RED TWIG DOGWOOD
   4. MINIMUM OF 340 ASSORTED PERENCIAL AND GRASS PLANTINGS (EX: BLUE FLAG IRIS, CARDINAL FLOWER, ETC...)

NOTE:

1. REFER TO DWG NO. C401 FOR SEQUENCE OF CONSTRUCTION.

2. REFER TO DWG NO. CS2 FOR LEGENDS, ABBREVIATIONS AND SYMBOLS.

3. TOTAL SITE LIMIT OF DISTURBANCE 0.90 ACRES

SOIL DATA:

SOIL TYPES ARE TAKEN FROM USDA SOIL SURVEY OF CHESTER COUNTY

Ha — Ha = HATBORO SILT LOAM 0-3 PERCENT SLOPES

Ho — Ho = HOLLY SILT LOAM 0-3 PERCENT SLOPES

UrP — UrP = URBAN LAND - HOLLY COMPLEX

LEGEND:

LANDSCAPE SUITABLE FOR RAIN GARDEN INSTALLATION (EX: BLUE FLAG IRIS, CARDINAL FLOWER, ETC...)

LANDSCAPE TO BE DETERMINED

3"-6" RIVER ROCK DECORATIVE STONE

FLOWERING TREES OF 25' OR LESS IN HEIGHT

GRAPHIC SCALE: 1" = 10'

10 0 10 20

Borton Lawson
ENGINEERING
ARCHITECTURE
www.borton-lawson.com

Northeast Pennsylvania
613 Baltimore Drive
Suite 300
Wilkes-Barre, PA. 18702
Voice: 570-821-1999
Fax: 570-821-1990

Lehigh Valley
3893 Adler Place
Suite 100
Bethlehem, PA. 18017
Voice: 484-821-0470
Fax: 484-821-0474

REVISIONS

12/29/09	REVISED AS PER TWNSHP ENG.	
DATE: 11/06/2009	DR.BY: EM2	
SCALE: 1"=20'	CH.BY:	

EROSION AND SEDIMENTATION CONTROL PLAN

TEEGARDEN PARK

TREDYFRIN TOWNSHIP, CHESTER COUNTY, PENNSYLVANIA

PROJECT NO. 2007-2196-00

DRAWING NO. C402

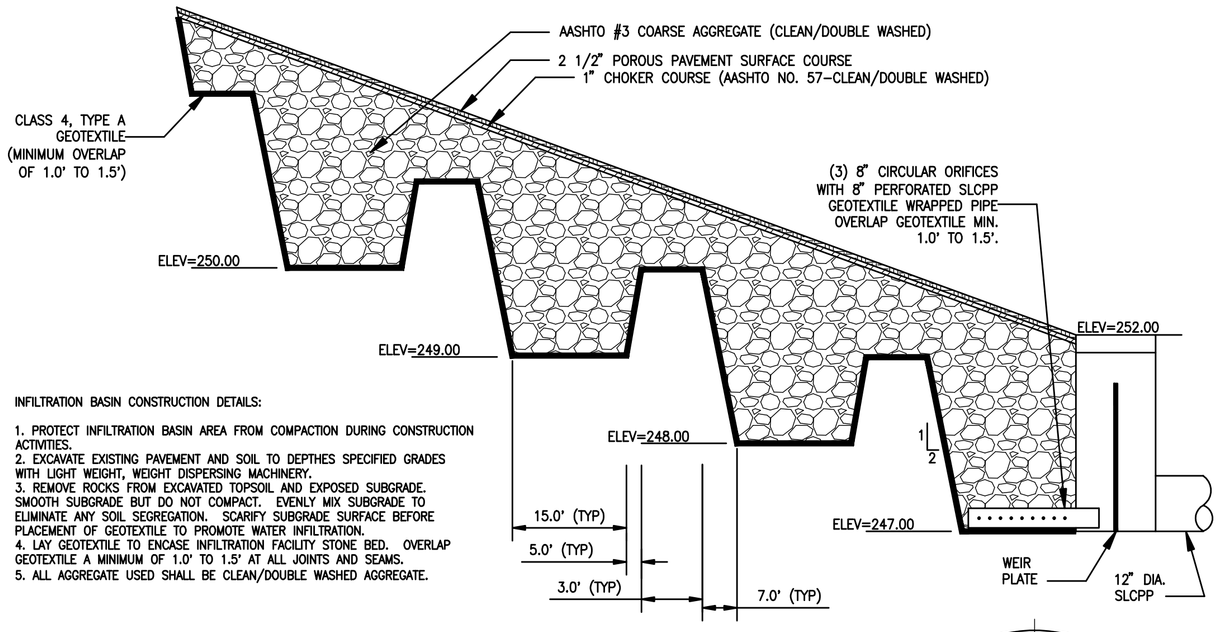

INFILTRATION BASIN CONSTRUCTION DETAILS:

1. PROTECT INFILTRATION BASIN AREA FROM COMPACTION DURING CONSTRUCTION ACTIVITIES.
2. EXCAVATE EXISTING PAVEMENT AND SOIL TO DEPTHES SPECIFIED GRADES WITH LIGHT WEIGHT, WEIGHT DISPERSING MACHINERY.
3. REMOVE ROCKS FROM EXCAVATED TOPSOIL AND EXPOSED SUBGRADE. SMOOTH SUBGRADE BUT DO NOT COMPACT. EVENLY MIX SUBGRADE TO ELIMINATE ANY SOIL SEGREGATION. SCARIFY SUBGRADE SURFACE BEFORE PLACEMENT OF GEOTEXTILE TO PROMOTE WATER INFILTRATION.
4. LAY GEOTEXTILE TO ENCASE INFILTRATION FACILITY STONE BED. OVERLAP GEOTEXTILE A MINIMUM OF 1.0' TO 1.5' AT ALL JOINTS AND SEAMS.
5. ALL AGGREGATE USED SHALL BE CLEAN/DOUBLE WASHED AGGREGATE.

POROUS PAVEMENT DETAIL

N.T.S.

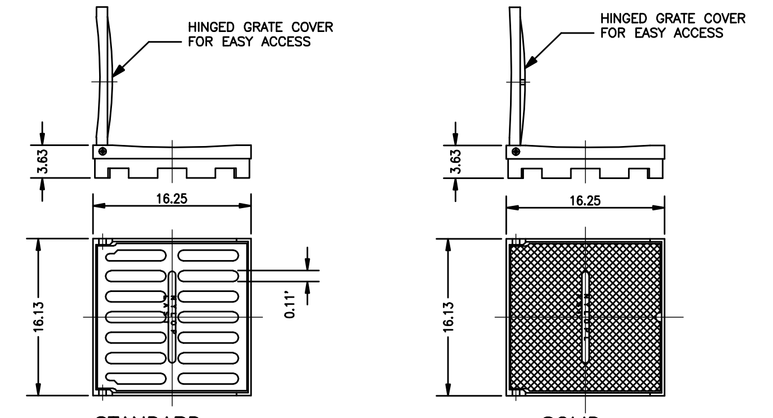

STANDARD

APPROX. DRAIN AREA = 92.70 SQ. IN.
APPROX. WEIGHT WITH FRAME = 59.62 LBS.

SOLID

APPROX. WEIGHT WITH FRAME = 59.00 LBS.

NYLOPLAST 15" GRATES/COVERS

STANDARD GRATE HAS H-25 HEAVY DUTY RATING
SOLID COVER HAS H-25 HEAVY DUTY RATING
PEDESTRIAN GRATE HAS H-10 MEDIUM DUTY RATING
QUALITY: MATERIALS SHALL CONFORM TO ASTM A536 GRADE 70-50-05 & A48-CLASS 30B
MATERIAL: DUCTILE IRON GRATE W/CAST IRON FRAME
PAINT: CASTINGS ARE FURNISHED WITH A BLACK PAINT
LOCKING DEVICE AVAILABLE UPON REQUEST
PRICE INCLUDES FRAME & GRATE/COVER

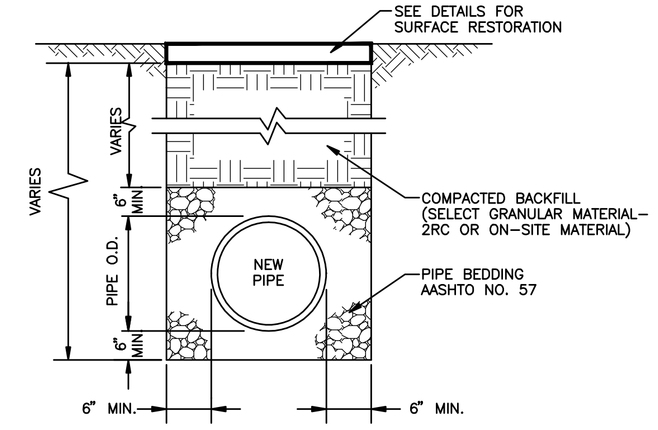

TYPICAL TRENCH BEDDING, BACKFILL AND RESTORATION DETAIL

NOT TO SCALE

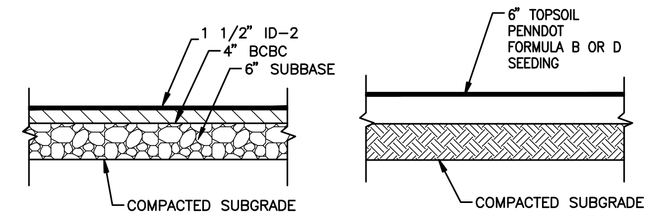

TYPICAL PAVE SECTION

TYPICAL GRASS AREA

TYPICAL SURFACE RESTORATION DETAIL

NOT TO SCALE

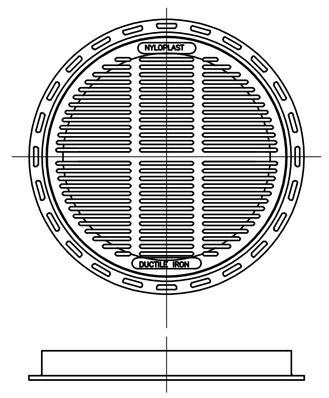

*PEDESTRIAN

APPROX. DRAIN AREA = 164.10 SQ. IN.
APPROX. WEIGHT WITH FRAME = 99.50 LBS.

* SIZE OF OPENING MEETS REQUIREMENTS OF AMERICAN DISABILITY ACT AS STATED IN FEDERAL REGISTER PART III, DEPARTMENT OF JUSTICE, 28 CFR PART 36. NONDISCRIMINATION ON THE BASIS OF DISABILITY BY PUBLIC ACCOMMODATIONS AND IN COMMERCIAL FACILITIES; FINAL RULE.

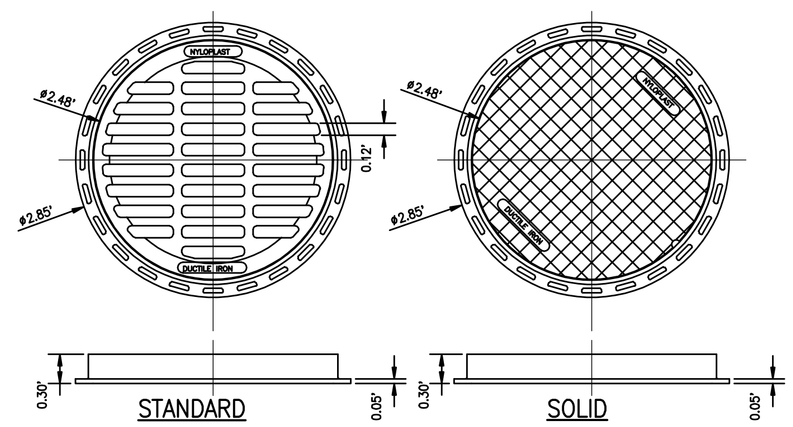

STANDARD

APPROX. DRAIN AREA = 194.60 SQ. IN.
APPROX. WEIGHT WITH FRAME = 124.00 LBS.

SOLID

APPROX. WEIGHT WITH FRAME = 138.00 LBS.

NYLOPLAST 24" GRATES/COVERS

STANDARD GRATE HAS H-25 HEAVY DUTY RATING
SOLID COVER HAS H-25 HEAVY DUTY RATING
PEDESTRIAN GRATE HAS H-10 MEDIUM DUTY RATING
QUALITY: MATERIALS SHALL CONFORM TO ASTM A536 GRADE 70-50-05
MATERIAL: DUCTILE IRON
PAINT: CASTINGS ARE FURNISHED WITH A BLACK PAINT
LOCKING DEVICE AVAILABLE UPON REQUEST
PRICE INCLUDES FRAME & GRATE/COVER

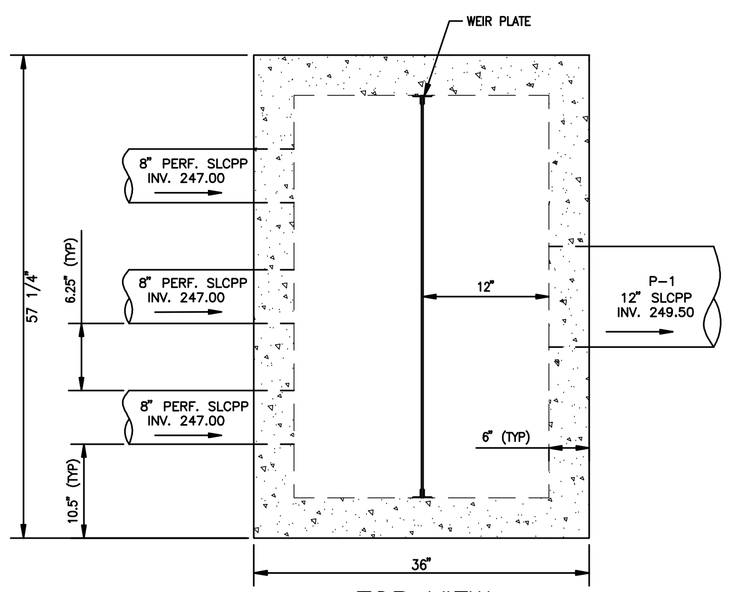

TOP VIEW

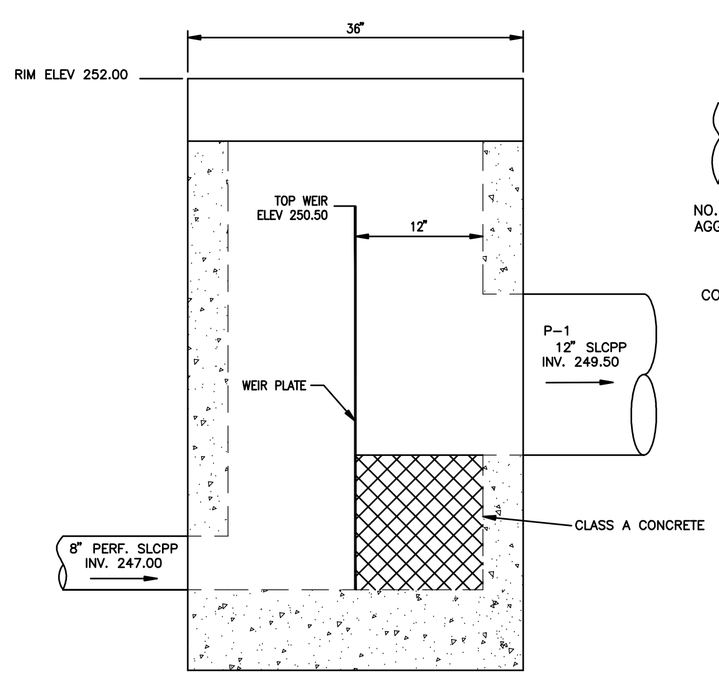

NOTE: CLEAN INLET BOX WHEN SEDIMENT ACCUMULATES A MAXIMUM OF 12"

SECTION

INLET I-2 TYPE M STRUCTURE

NOT TO SCALE

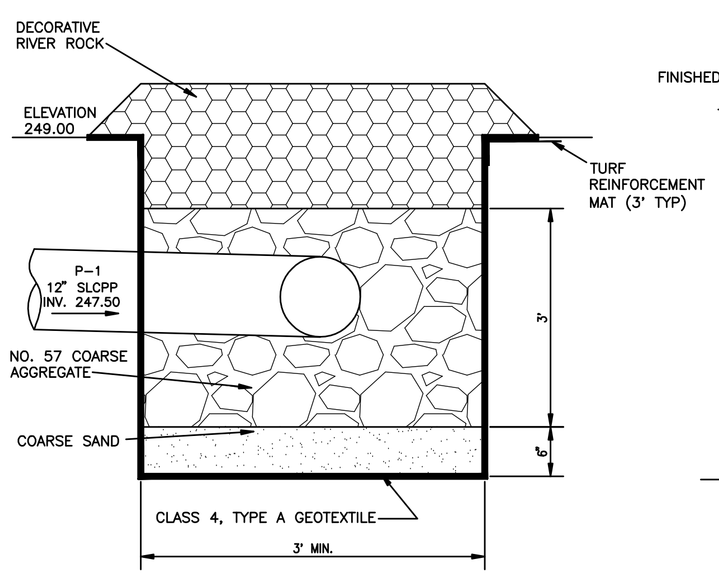

LEVEL SPREADER DETAIL

NOT TO SCALE

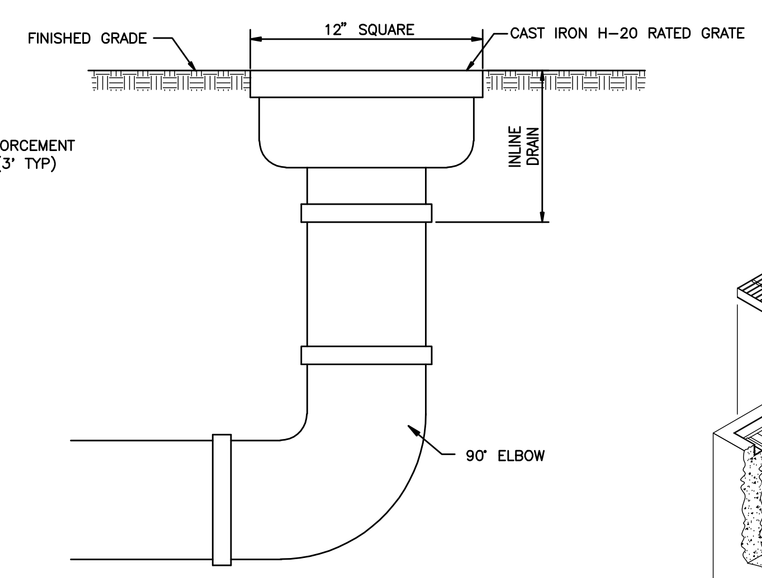

ADVANCED DRAINAGE SYSTEMS, INC. MODEL 2712AG6N, OR APPROVED EQUAL.

INSTALL IN ACCORDANCE WITH MANUFACTURER'S RECOMMENDATIONS.

INLINE DRAIN

NOT TO SCALE

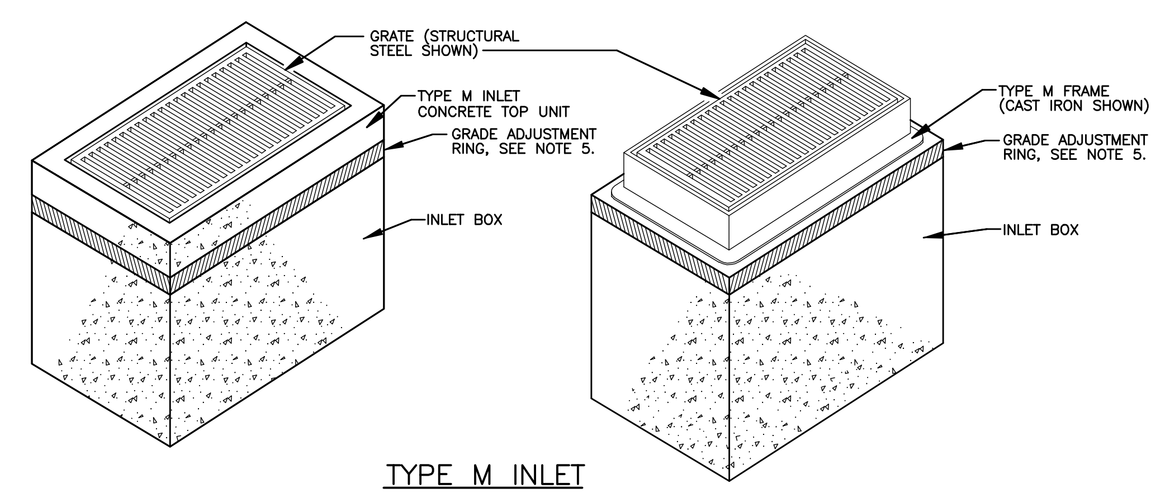

TYPE M INLET

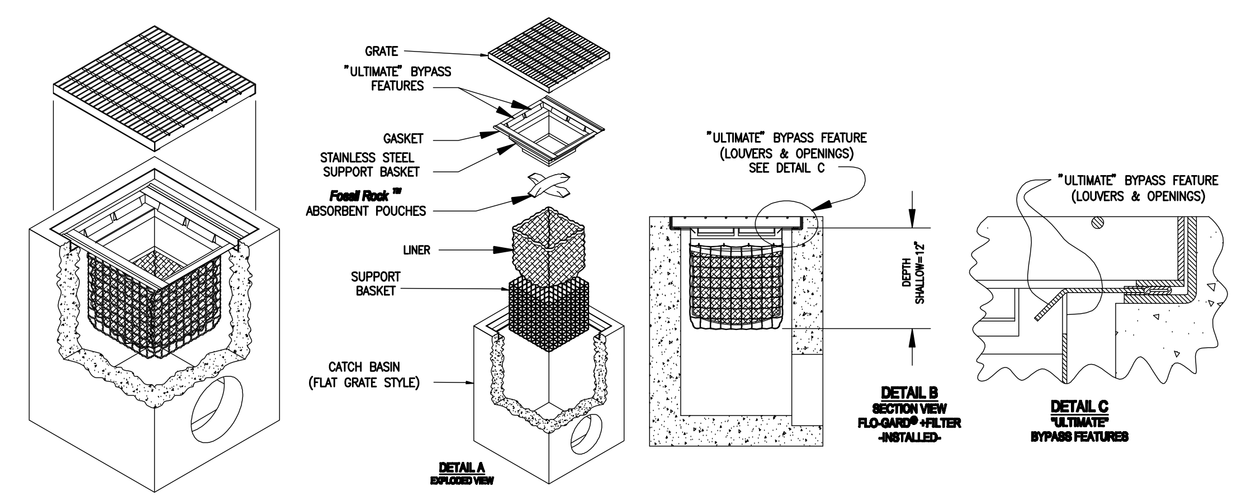

INSTALLATION:

INSTALL WATER QUALITY INSERTS TO MANUFACTURER SPECIFICATIONS.

MAINTENANCE PROCEDURES:
* CONDUCT COLLECTION AND REMOVAL OF SEDIMENT AND DEBRIS AROUND THE DRAINAGE INLET. THIS SHALL BE CONDUCTED AT A MINIMUM OF THREE TIMES PER YEAR.
* THE WATER QUALITY INSERTS SHALL BE INSPECTED FOR DEFECTS AND CONTINUED SERVICEABILITY AND REPLACED AS NECESSARY.

WATER QUALITY INSERT

NOT TO SCALE

Borton Lawson
ENGINEERING ARCHITECTURE
www.borton-lawson.com

Northeast Pennsylvania
613 Baltimore Drive
Suite 300
Wilkes-Barre, PA. 18702
Voice: 570-821-1999
Fax: 570-821-1990

Lehigh Valley
3893 Adler Place
Suite 100
Bethlehem, PA. 18017
Voice: 484-821-0470
Fax: 484-821-0474

REVISIONS

12/29/09	REVISED AS PER TWNSHIP ENG.
DATE: 11/6/09	DR.BY: JDR/EM2
SCALE: AS SHOWN	CH.BY:

SITE DETAILS

TEEGARDEN PARK

TREDYFRIN TOWNSHIP, CHESTER COUNTY, PENNSYLVANIA

PROJECT NO. 2007-2196-00

DRAWING NO. C901

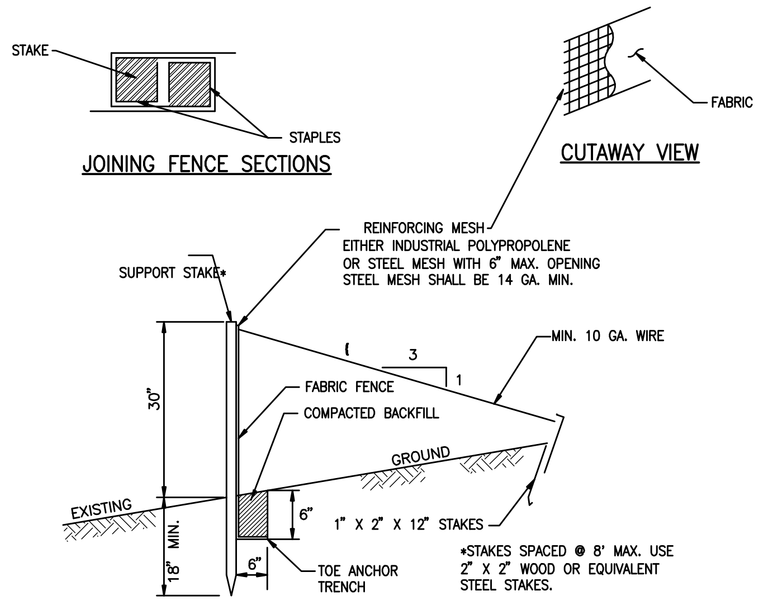

FILTER FABRIC FENCE MUST BE INSTALLED AT EXISTING LEVEL GRADE. BOTH ENDS OF EACH FENCE SECTION MUST BE EXTENDED AT LEAST 8 FEET UPSLOPE AT 45 DEGREES TO THE MAIN FENCE ALIGNMENT.

SEDIMENT MUST BE REMOVED WHERE ACCUMULATIONS REACH 1/2 THE ABOVE GROUND HEIGHT OF THE FENCE.

ANY FENCE SECTION WHICH HAS BEEN UNDERMINED OR TOPPED MUST BE IMMEDIATELY REPLACED WITH A ROCK FILTER OUTLET. SEE STANDARD CONSTRUCTION DETAIL #18.

STANDARD CONSTRUCTION DETAIL #20
REINFORCED FILTER FABRIC FENCE (30" HIGH)

NOT TO SCALE

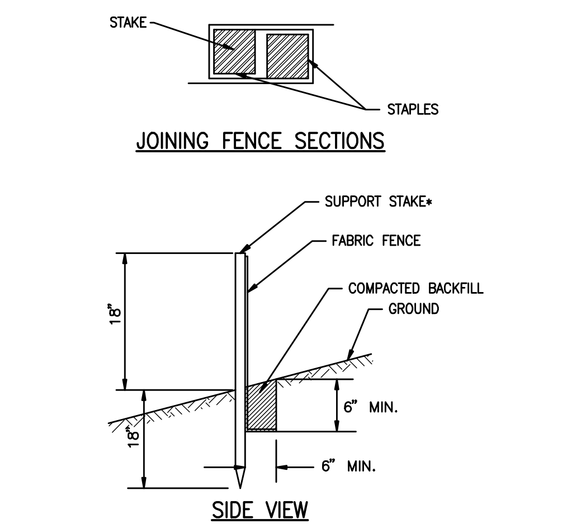

* STAKES SPACED @ 8' MAXIMUM. USE 2" X 2" WOOD OR EQUIVALENT STEEL STAKES.

FILTER FABRIC FENCE MUST BE PLACED AT LEVEL EXISTING GRADE. BOTH ENDS OF THE BARRIER MUST BE EXTENDED AT LEAST 8 FEET UP SLOPE AT 45 DEGREES TO THE MAIN BARRIER ALIGNMENT.

SEDIMENT MUST BE REMOVED WHEN ACCUMULATIONS REACH 1/2 THE ABOVE GROUND HEIGHT OF THE FENCE.

ANY SECTION OF FILTER FABRIC FENCE WHICH HAS BEEN UNDERMINED OR TOPPED MUST BE IMMEDIATELY REPLACED WITH A ROCK FILTER OUTLET. SEE STANDARD CONSTRUCTION DETAIL #18.

STANDARD CONSTRUCTION DETAIL #19
STANDARD FILTER FABRIC FENCE (18" HIGH)

NOT TO SCALE

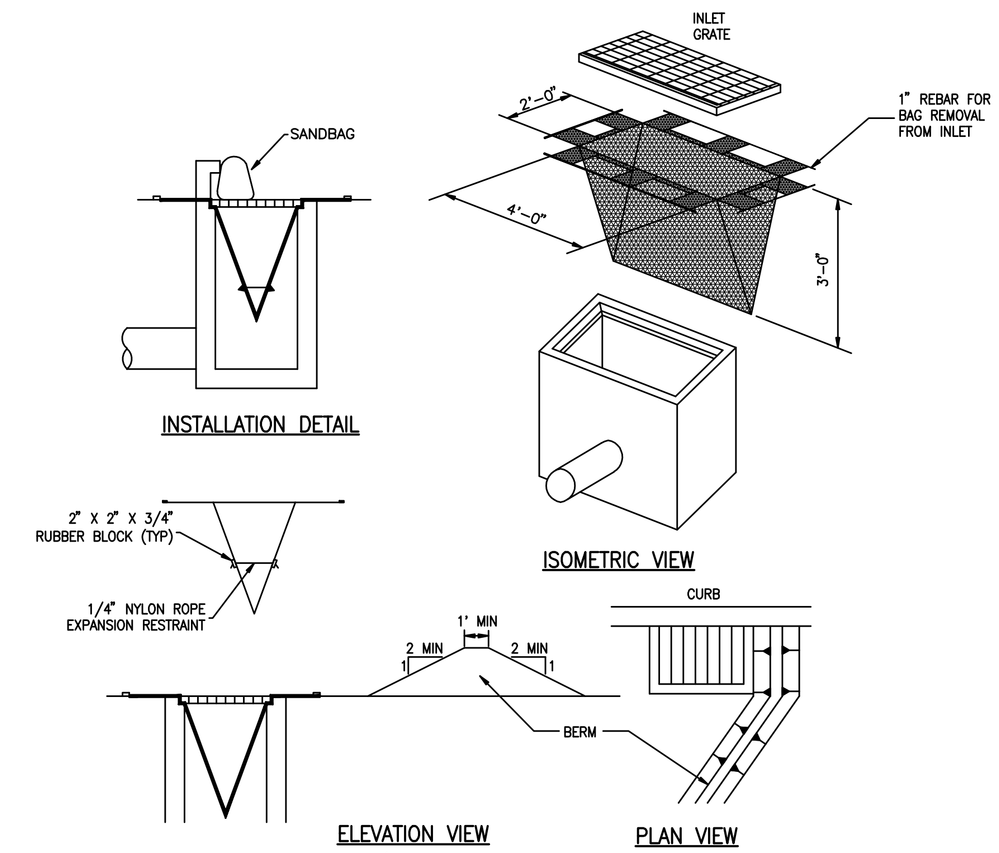

MAXIMUM DRAINAGE AREA = 1/2 ACRE.
INLET PROTECTION IS NOT REQUIRED FOR INLET TRIBUTARY TO SEDIMENT BASIN OR TRAP. BERMS REQUIRED FOR ALL INSTALLATIONS.

EARTHEN BERM SHALL BE MAINTAINED UNTIL ROADWAY IS STONED. ROAD SUBBASE BERM SHALL BE MAINTAINED UNTIL ROADWAY IS PAVED.

SIX INCH MINIMUM HEIGHT ASPHALT BERM SHALL BE MAINTAINED UNTIL ROADWAY SURFACE RECEIVES FINAL COAT.

DO NOT USE ON MAJOR PAVED ROADWAYS WHERE PONDING MAY CAUSE TRAFFIC HAZARDS

STANDARD CONSTRUCTION DETAIL #28
FILTER BAG INLET PROTECTION CURBED ROADWAY

NOT TO SCALE

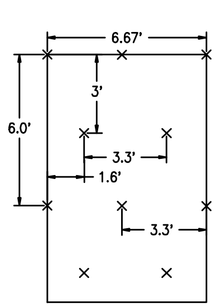

STAPLE PATTERN B

1.15 STAPLES PER SQ. YD.

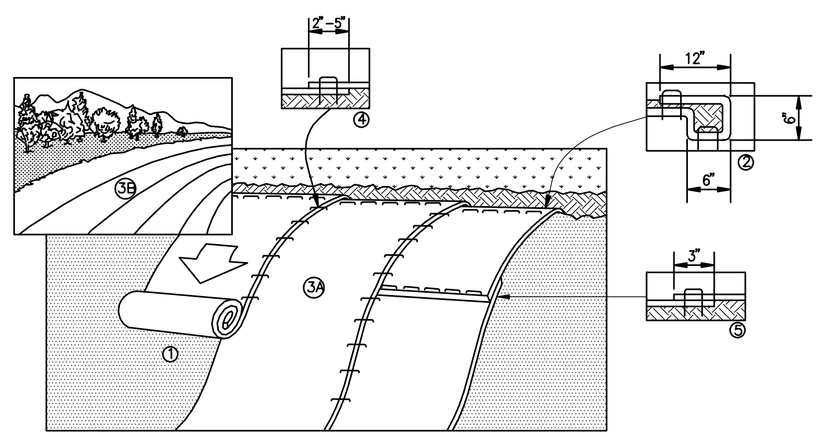

SLOPE INSTALLATION

1. PREPARE SOIL BEFORE INSTALLING BLANKETS, INCLUDING ANY NECESSARY APPLICATION OF LIME, FERTILIZER, AND SEED. NOTE: WHEN USING CELL-O-SEED DO NOT SEED PREPARED AREA. CELL-O-SEED MUST BE INSTALLED WITH PAPER SIDE DOWN.
2. BEGIN AT THE TOP OF THE SLOPE BY ANCHORING THE BLANKET IN A 6" (15CM) DEEP X 6" (15CM) WIDE TRENCH WITH APPROXIMATELY 12" (30CM) OF BLANKET EXTENDED BEYOND THE UP-SLOPE PORTION OF THE TRENCH. ANCHOR THE BLANKET WITH A ROW OF STAPLES/STAKES APPROXIMATELY 12" (30CM) APART IN THE BOTTOM OF THE TRENCH. BACKFILL AND COMPACT THE TRENCH AFTER STAPLING. APPLY SEED TO COMPACTED SOIL AND FOLD REMAINING 12" (30CM) PORTION OF BLANKET BACK OVER SEED AND COMPACTED SOIL. SECURE BLANKET OVER COMPACTED SOIL WITH A ROW OF STAPLES/STAKES SPACED APPROXIMATELY 12" (30CM) APART ACROSS THE WIDTH OF THE BLANKET.
3. ROLL THE BLANKETS (A.) DOWN OR (B.) HORIZONTALLY ACROSS THE SLOPE. BLANKETS WILL UNROLL WITH APPROPRIATE SIDE AGAINST THE SOIL SURFACE. ALL BLANKETS MUST BE SECURELY FASTENED TO SOIL SURFACE BY PLACING STAPLES/ STAKES IN APPROPRIATE LOCATIONS AS SHOWN IN THE STAPLE PATTERN GUIDE. WHEN USING OPTIONAL DOT SYSTEM, STAPLES/STAKES SHOULD BE PLACED THROUGH EACH OF THE COLORED DOTS CORRESPONDING TO THE APPROPRIATE STAPLE PATTERN.
4. THE EDGES OF PARALLEL BLANKETS MUST BE STAPLED WITH APPROXIMATELY 2"-5" (5CM-12.5CM) OVERLAP DEPENDING ON BLANKET TYPE. TO ENSURE PROPER SEAM ALIGNMENT, PLACE THE EDGE OF THE OVERLAPPING BLANKET (BLANKET BEING INSTALLED ON TOP) EVEN WITH THE COLORED SEAM STITCH ON THE PREVIOUSLY INSTALLED BLANKET. 5. CONSECUTIVE BLANKETS SPLICED DOWN THE SLOPE MUST BE PLACED END OVER END (SHINGLE STYLE) WITH AN APPROXIMATE 3" (7.5CM) OVERLAP. STAPLE THROUGH OVERLAPPED AREA, APPROXIMATELY 12" (30CM) APART ACROSS ENTIRE BLANKET WIDTH.

NOTES:

1. INSTALLATION TO BE COMPLETED IN ACCORDANCE WITH MANUFACTURER'S SPECIFICATIONS
2. DO NOT SCALE DRAWINGS.
3. IN LOOSE SOIL CONDITIONS THE USE OF STAPLE OR STAKE LENGTHS GREATER THAN 6" (15CM) MAY BE NECESSARY TO PROPERLY SECURE THE BLANKETS.

EROSION CONTROL BLANKETS- SLOPE INSTALLATION

NOT TO SCALE

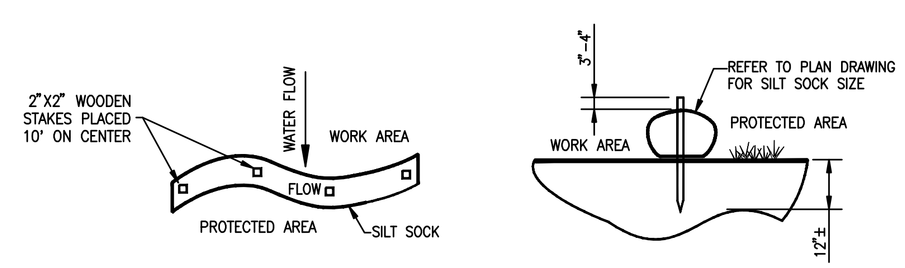

SILT SOCK INSTALLATION, INSPECTION AND MAINTENANCE NOTES:

ROUTINE INSPECTION SHOULD BE CONDUCTED WITHIN 24 HRS OF A RUNOFF EVENT OR AS DESIGNATED BY THE REGULATING AUTHORITY. SILT SOCKS SHOULD BE REGULARLY INSPECTED TO MAKE SURE THEY MAINTAIN THEIR SHAPE AND ARE PRODUCING ADEQUATE HYDRAULIC FLOW-THROUGH. IF PONDING BECOMES EXCESSIVE, ADDITIONAL SILT SOCKS MAY BE REQUIRED TO REDUCE EFFECTIVE SLOPE LENGTH OR SEDIMENT REMOVAL MAY BE NECESSARY. SILT SOCKS SHALL BE INSPECTED UNTIL AREA ABOVE HAS BEEN PERMANENTLY STABILIZED AND CONSTRUCTION ACTIVITY HAS CEASED.

1. SILT SOCK COMPOST/SOIL/ROCK/SEED FILL TO MEET APPLICATION REQUIREMENTS.
2. SILT SOCK DEPICTED IS FOR MINIMUM SLOPES. GREATER SLOPES MAY REQUIRE LARGER SILT SOCKS PER THE ENGINEER.
3. PRE-WET SILT SOCK PRIOR TO STAKING.
4. TRAFFIC SHALL NOT BE PERMITTED TO CROSS FILTER SOCKS.
5. THE CONTRACTOR SHALL MAINTAIN THE SILT SOCKS IN A FUNCTIONAL CONDITION AT ALL TIMES AND IT SHALL BE ROUTINELY INSPECTED.
6. IF THE SILT SOCK HAS BEEN DAMAGED, IT SHALL BE REPAIRED, OR REPLACED IF BEYOND REPAIR.
7. THE CONTRACTOR SHALL REMOVE SEDIMENT AT THE BASE OF THE UPSLOPE SIDE OF THE SILT SOCKS WHEN ACCUMULATION AS REACHED 1/2 OF THE EFFECTIVE HEIGHT OF THE SILT SOCKS, OR AS DIRECTED BY THE ENGINEER. ALTERNATIVELY, A NEW SILT SOCKS CAN BE PLACED ON TOP OF AND SLIGHTLY BEHIND THE ORIGINAL ONE CREATING MORE SEDIMENT STORAGE CAPACITY WITHOUT SOIL DISTURBANCE.
8. SILT SOCKS SHALL BE MAINTAINED UNTIL DISTURBED AREA ABOVE THE DEVICE HAS BEEN PERMANENTLY STABILIZED AND CONSTRUCTION ACTIVITY HAS CEASED.
9. THE FILTERMEDIA WILL BE DISPERSED ON SITE ONCE THE DISTURBED AREA HAS BEEN PERMANENTLY STABILIZED, CONSTRUCTION ACTIVITY HAS CEASED, OR AS DETERMINED BY THE ENGINEER.
10. FOR LONG-TERM SEDIMENT AND POLLUTION CONTROL APPLICATIONS, SILT SOCKS CAN BE SEEDED AT THE TIME OF INSTALLATION TO CREATE A VEGETATIVE FILTERING SYSTEM FOR PROLONGED AND INCREASED FILTRATION OF SEDIMENT AND SOLUBLE POLLUTANTS (CONTAINED VEGETATIVE FILTER STRIP). THE APPROPRIATE SEED MIX SHALL BE DETERMINED BY THE ENGINEER.

SILT SOCK

NOT TO SCALE

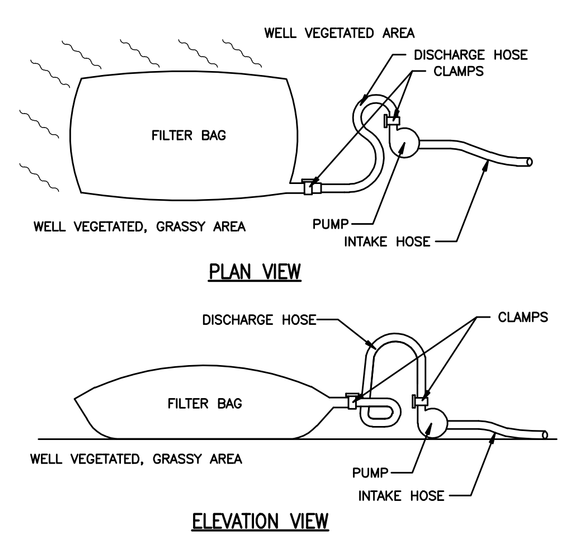

STANDARD CONSTRUCTION DETAIL #26
PUMPED WATER FILTER BAG

NOT TO SCALE

NOTES:

1. FILTER BAGS SHALL BE MADE FROM NON-WOVEN GEOTEXTILE MATERIAL SEWN WITH HIGH STRENGTH, DOUBLE STITCHED "J" TYPE SEAMS. THEY SHALL BE CAPABLE OF TRAPPING PARTICLES LARGER THAN 150 MICRONS.

2. A SUITABLE MEANS OF ACCESSING THE BAG WITH MACHINERY REQUIRED FOR DISPOSAL PURPOSES MUST BE PROVIDED. FILTER BAGS SHALL BE REPLACED WHEN THEY BECOME 1/2 FULL. SPARE BAGS SHALL BE KEPT AVAILABLE FOR REPLACEMENT OF THOSE THAT HAVE FAILED OR ARE FILLED.

3. BAGS SHALL BE LOCATED IN WELL-VEGETATED (GRASSY) AREAS, AND DISCHARGE ONTO STABLE, EROSION RESISTANT AREAS. WHERE THIS IS NOT POSSIBLE, A GEOTEXTILE FLOW PATH SHALL BE PROVIDED. BAGS SHALL NOT BE PLACED ON SLOPES GREATER THAN 5%.

4. THE PUMP DISCHARGE HOSE SHALL BE INSERTED INTO THE BAGS IN THE MANNER SPECIFIED BY THE MANUFACTURER AND SECURELY CLAMPED.

5. THE PUMPING RATE SHALL BE NO GREATER THAN 750 GPM OR 1/2 THE MAXIMUM SPECIFIED BY THE MANUFACTURER, WHICHEVER IS LESS. PUMP INTAKES SHOULD BE FLOATING AND SCREENED.

6. FILTER BAGS SHALL BE INSPECTED DAILY. IF ANY PROBLEM IS DETECTED, PUMPING SHALL CEASE IMMEDIATELY AND NOT RESUME UNTIL THE PROBLEM IS CORRECTED.

Borton Lawson
ENGINEERING
ARCHITECTURE
www.borton-lawson.com

Northeast Pennsylvania
613 Baltimore Drive
Suite 300
Wilkes-Barre, PA. 18702
Voice: 570-821-1999
Fax: 570-821-1990

Lehigh Valley
3893 Adler Place
Suite 100
Bethlehem, PA. 18017
Voice: 484-821-0470
Fax: 484-821-0474

REVISIONS

DATE: 11/6/09 | DR.BY: JDR/AN2
SCALE: AS SHOWN | CH.BY:

E&S DETAILS

TEEGARDEN PARK
TREDYFRIN TOWNSHIP, CHESTER COUNTY, PENNSYLVANIA

PROJECT NO. 2007-2196-00
DRAWING NO. C902

RECYCLING AND DISPOSAL OF WASTE MATERIALS:

ALL ACCUMULATED SEDIMENT WILL BE INCORPORATED INTO THE FILL AND REUSED ON-SITE. UNSUITABLE MATERIAL WILL BE REMOVED FROM THE SITE AND DISPOSED OF IN A LAWFUL MANNER ACCORDING TO THE PA DEPARTMENT OF ENVIRONMENTAL PROTECTION'S SOLID WASTE MANAGEMENT REGULATIONS (PA CODE TITLE 25, CHAPTER 260.1 ET SEQ, 271.1 ET SEQ. AND 287.1 ET SEQ). THE DISPOSAL SITE MUST HAVE A SEPARATE EROSION CONTROL PLAN AND MUST BE APPROVED BY THE ENGINEER AND THE COUNTY CONSERVATION DISTRICT.

MAINTENANCE PROGRAM:

THE CONTRACTOR IS REQUIRED TO INCORPORATE ALL TEMPORARY AND PERMANENT CONTROL MEASURES AND FACILITIES INDICATED IN THE APPROVED PLAN INTO THE PROJECT AT THE EARLIEST PRACTICABLE TIME. THE CONTRACTOR IS RESPONSIBLE FOR APPLYING, CLEANING, AND MAINTAINING ALL CONTROL FEATURES DURING CONSTRUCTION. APPROPRIATE EROSION AND SEDIMENT POLLUTION CONTROL FEATURES SHALL BE APPLIED TO SECTIONS SUCH AS BORROW PITS AND MATERIAL STORAGE AREAS UNFORESEEN PRIOR TO CONSTRUCTION. PERMANENT EROSION CONTROL FACILITIES WILL BE MAINTAINED BY THE OWNER.

THE TEMPORARY FACILITIES FOR EROSION AND SEDIMENT POLLUTION CONTROL SHALL BE INSPECTED A MINIMUM OF ONCE PER WEEK AND AFTER EVERY RAINFALL EVENT. SEDIMENT SHALL BE REMOVED WHEN ACCUMULATIONS REACH 1/2 THE ABOVE GROUND HEIGHT OF FILTER FABRIC FENCES AND 1/3 ABOVE GROUND HEIGHT FOR ROCK FILTERS. ANY FILTER FABRIC FENCE SECTION THAT HAS BEEN UNDERMINED OR OVERTOPPED MUST BE IMMEDIATELY REPLACED WITH A ROCK FILTER. AS CONSTRUCTION PROGRESSES AND DISTURBED AREAS HAVE BEEN STABILIZED, TEMPORARY EROSION CONTROL STRUCTURES ARE TO BE CLEANED AND REMOVED.

RESPONSIBILITIES FOR FILL MATERIALS:

THE IMPLEMENTATION OF FILL MATERIALS WILL BE THE RESPONSIBILITY OF OWNER.

OWNER: SANOFI PASTEUR INC.
DISCOVERY DRIVE
SWIFTWATER, PENNSYLVANIA 18370

CLEAN FILL:

* THE OPERATOR OF THE SITE WILL PERFORM ENVIRONMENTAL DUE DILIGENCE ON ALL IMPORTED SOILS THAT WILL BE UTILIZED ON THE PROJECT SITE.

* ENVIRONMENTAL DUE DILIGENCE IS DEFINED AS: INVESTIGATIVE TECHNIQUES, INCLUDING, BUT NOT LIMITED TO, VISUAL PROPERTY INSPECTIONS, ELECTRONIC DATA BASE SEARCHES, REVIEW OF PROPERTY OWNERSHIP, REVIEW OF PROPERTY USE HISTORY, SANBORN MAPS, ENVIRONMENTAL QUESTIONNAIRES, TRANSACTION SCREENS, ANALYTICAL TESTING, ENVIRONMENTAL ASSESSMENTS OR AUDITS.

* ANALYTICAL TESTING IS REQUIRED FOR FILL MATERIAL SUSPECTED OF BEING SUBJECTED TO A SPILL OR RELEASE OF A REGULATED SUBSTANCE BASED UPON COMPLETION OF VISUAL INSPECTION AND/OR REVIEW OF PAST LAND USES AS PART OF ENVIRONMENTAL DUE DILIGENCE. FILL MATERIAL DETERMINED TO NOT QUALIFY AS CLEAN FILL THROUGH ANALYTICAL TESTING IS CONSIDERED REGULATED FILL AND MUST BE MANAGED AS A WASTE IN ACCORDANCE WITH APPLICABLE MUNICIPAL OR RESIDUAL WASTE REGULATIONS OF THE DEPARTMENT.

* CLEAN FILL IS DEFINED AS: UNCONTAMINATED NON-WATER SOLUBLE, NON-DECOMPOSABLE, INERT SOLID. THE TERM INCLUDES SOIL, ROCK, STONE, DREDGED MATERIALS, USED ASPHALT, AND BRICK, BLOCK OR CONCRETE FROM CONSTRUCTION AND DEMOLITION ACTIVITIES THAT IS SEPARATE FROM OTHER WASTE AND IS RECOGNIZABLE AS SUCH. TERM DOES NOT INCLUDE MATERIALS PLACED IN OR ON THE WATERS OF THE COMMONWEALTH UNLESS OTHERWISE AUTHORIZED.

MAINTENANCE:

EROSION AND SEDIMENTATION CONTROLS MUST BE CONSTRUCTED, STABILIZED, AND FUNCTIONAL BEFORE SITE DISTURBANCE WITHIN THE TRIBUTARY AREAS OF THOSE CONTROLS. UNTIL THE SITE IS STABILIZED, ALL EROSION CONTROLS MUST BE MAINTAINED PROPERLY. ALL PREVENTATIVE AND REMEDIAL MAINTENANCE WORK, INCLUDING CLEAN OUT, REPAIR, REPLACEMENT, REGRADING, RESEEDING REMULCHING, AND RENETTING MUST BE PERFORMED IMMEDIATELY. ALL EROSION CONTROL FACILITIES SHALL BE INSPECTED WEEKLY AND AFTER EACH RUNOFF EVENT.

ALL SEDIMENT SPILLED, DROPPED, WASHED, OR TRACKED ONTO ANY ROADWAY OR ANY PUBLIC RIGHT-OF-WAY SHALL IMMEDIATELY BE REMOVED. WASHING SEDIMENT FROM THE PAVEMENT IS PROHIBITED.

SEDIMENT SHALL BE REMOVED WHEN ACCUMULATIONS REACH 1/2 THE ABOVE GROUND HEIGHT OF SILT FENCES AND ROCK FILTERS. ACCUMULATED SEDIMENT MAY BE INCORPORATED INTO THE FILL OR REMOVED FROM THE SITE AND DISPOSED OF IN A LAWFUL MANNER (AN APPROVED SOIL EROSION CONTROL PLAN WILL BE REQUIRED FOR ANY OFFSITE DISPOSAL AREA). ANY SILT FENCE SECTION THAT HAS BEEN UNDERMINED OR OVERTOPPED MUST BE IMMEDIATELY REPLACED WITH A ROCK FILTER.

AS CONSTRUCTION ENTRANCE BECOMES CLOGGED WITH SEDIMENT IT SHALL BE RESTONED OR REPLACED. STONE USED FOR CONSTRUCTION ENTRANCES MAY BE WASHED AND REUSED AS LONG AS RUNOFF FROM THE CLEANING PROCESS IS DIRECTED INTO AN ADEQUATE SEDIMENT FILTERING DEVICE.

SHOULD UNFORESEEN EROSIVE CONDITIONS DEVELOP, IT IS THE CONTRACTOR'S RESPONSIBILITY TO IMMEDIATELY CORRECT THE PROBLEM.

OWNER IS RESPONSIBLE FOR MAINTENANCE OF PERMANENT CONTROLS.

THE CONTRACTOR SHALL, PERIODICALLY OR AS DIRECTED DURING THE PROGRESS OF THE WORK, REMOVE AND LEGALLY DISPOSE OF ALL SURPLUS MATERIAL AND DEBRIS AND KEEP THE PROJECT AREA AND PUBLIC RIGHT-OF-WAYS REASONABLY CLEAR. SURPLUS OR DEMOLITION MATERIALS SHALL BE RECYCLED DURING THE COURSE OF THE WORK, WHENEVER PRACTICAL AND APPROVED BY THE DESIGN ENGINEER. UPON COMPLETION OF THE WORK, THE CONTRACTOR SHALL REMOVE ALL TEMPORARY CONSTRUCTION FACILITIES, DEBRIS AND UNUSED MATERIALS, PROVIDED FOR THE WORK, AND PUT ALL OF THE SITES OF THE WORK SITE OF THE WILL NOT BE PERMITTED. OFF-SITE DISPOSAL OF SOIL OR ROCK WILL REQUIRE AND EROSION AND SEDIMENTATION CONTROL PLAN SUBMISSION, BY THE CONTRACTOR, TO THE APPROPRIATE CONSERVATION DISTRICT.

MEADOW LANDSCAPE MAINTENANCE:

1. FOR THE FIRST YEAR, CUT MEADOW/WILDFLOWER GROWTH TO A HEIGHT OF 6 INCHES, NO LESS. TRY TO AVOID MOWING IF AT ALL POSSIBLE DUE TO COMPACTION FROM MOWERS. (MOWERS ARE MORE APPROPRIATE FOR LATER YEARS OF CUTTING ONCE STABILIZATION AND COVERAGE IS ACCOMPLISHED.) CUT OR HAND PULL INVASIVE WEEDS AS NEEDED. IN THE FIRST YEAR WEEDS MUST BE CAREFULLY CONTROLLED AND CONSISTENTLY CUT BACK WHEN THEY REACH HEIGHTS OF 12 INCHES MAX.
2. IN THE SECOND YEAR, CUT MEADOW/WILDFLOWER GROWTH TO A HEIGHT OF 2 INCHES IN MID-SPRING. CONTINUE TO MONITOR AND REMOVE PERSISTENT WEEDS. WEEDS SHOULD NOT BE SPRAYED WITH HERBICIDES DUE TO THE POSSIBILITY OF SPRAY DRIFT KILLING DESIRABLE PLANTS.
3. IN THE BEGINNING OF THE THIRD SEASON, THE MEADOW SHOULD BE CUT TO HEIGHT OF 1 TO 2 INCHES. THE CUT MATERIAL SHOULD BE REMOVED. SUBSEQUENT YEARS MAINTENANCE ONLY REQUIRES ONE MOWING IN MID-SPRING AND REMOVAL OF CUT MATERIAL.

MEADOW/WILDFLOWER SEED MIX

SEED FORMULA: MEADOW/WILDFLOWER SEED MIX COMMERCIALLY AVAILABLE PRE-MIXED SEED BLEND WITH PURITY AND GERMINATION GUARANTEED.
SEED MIXES TO INCLUDE SOME OF (BUT NOT LIMITED TO):
MILKWEED, BUTTERFLYWEED, ASTER, TRUMPETWEED, BONESET, BLUE FLAG IRIS, CARDINAL FLOWER, BLUE LOBELIA, MONKEY-FLOWER, WILD COLUMBINE, BLUE JOINT REED GRASS, FOWL MANAGRASS, SWITCHGRASS, INDIAN GRASS, LITTLE BLUESTEM, SEDGE, CANADA RUSH, BULRUSH, BUR-REED.

1. APPLY SEED MIX AT MANUFACTURERS RECOMMENDED APPLICATION RATE
2. AVOID APPLICATION OF LIME AND FERTILIZER WHEN POSSIBLE. AMEND SOIL WITH COMPOST FREE OF HEAVY METALS, CHEMICALS, OR PERVASIVE WEEDS.
3. APPLY HAY OR STRAW MULCH AT 3 TONS PER ACRE.
4. FOLLOW MANUFACTURERS GUIDELINES FOR DATES OF SEEDING, BUT IN GENERAL SEED BETWEEN MARCH 15 TO JUNE 1 AND AUGUST 1 TO OCTOBER 15.
5. APPLY SEED BY HAND OR MECHANICAL BROADCASTER. DO NOT HYDROSEED.
6. REFER TO THIS SHEET AND TO PCSM SHEET 2 OF 2 FOR EXAMPLE SEED MIXTURES.

FOR FINAL MEASURES

SEED FORMULA (SLOPES 3:1 OR FLATTER): PENNDOT FORMULA B

20% PERENNIAL RYEGRASS
30% CREEPING RED FESCUE OR CHEWINGS FESCUE
50% KENTUCKY BLUEGRASS MIXTURE

1. APPLY GROUND LIMESTONE @ 2480 LBS. PER 1000 SQ. YD. (6.0 T./AC.)
2. APPLY 10-20-20 ANALYSIS FERTILIZER @ 140 LBS. PER 1000 SQ. YD. (677.6 LB./AC.)
3. APPLY FORMULA B SEED @ 21 LBS. PER 1000 SQ. YD. (101.6 LB./AC.)
4. APPLY HAY OR STRAW MULCH AT 3 TONS PER ACRE.
5. PERFORM SEEDING BETWEEN MARCH 15 TO JUNE 1 AND AUGUST 1 TO OCTOBER 15.

SEED FORMULA (SLOPES 3:1 OR GREATER): PENNDOT FORMULA D
70% TALL FESCUE
30% CREEPING RED FESCUE OR CHEWINGS FESCUE

1. APPLY GROUND LIMESTONE @ 2480 LBS. PER 1000 SQ. YD. (6.0 T./AC.)
2. APPLY 10-20-20 ANALYSIS FERTILIZER @ 140 LBS. PER 1000 SQ. YD. (677.6 LB./AC.)
3. APPLY FORMULA D SEED @ 21 LBS. PER 1000 SQ. YD. (101.6 LB./AC.)
4. APPLY HAY OR STRAW MULCH AT 3 TONS PER ACRE.
5. PERFORM SEEDING BETWEEN MARCH 15 TO JUNE 1 AND AUGUST 1 TO OCTOBER 15.

GENERAL NOTES

1) A COPY OF THE EROSION AND SEDIMENT CONTROL PLAN MUST BE AVAILABLE AT THE PROJECT SITE AT ALL TIMES.

2) AT LEAST 3 DAYS BEFORE STARTING ANY EARTH DISTURBANCE ACTIVITIES, ALL CONTRACTORS INVOLVED IN EARTH DISTURBANCE ACTIVITIES SHALL NOTIFY THE PENNSYLVANIA ONE CALL SYSTEM INCORPORATED AT 1-800-242-1776 FOR BURIED UTILITY LOCATIONS.

3) STOCKPILE HEIGHTS MUST NOT EXCEED 35 FEET. STOCKPILE SLOPES MUST BE 2:1 OR FLATTER.

4) THE OPERATOR SHALL ASSURE THAT THE APPROVED EROSION AND SEDIMENT CONTROL PLAN IS PROPERLY AND COMPLETELY IMPLEMENTED.

5) IMMEDIATELY UPON DISCOVERING UNFORESEEN CIRCUMSTANCES POSING THE POTENTIAL FOR ACCELERATED EROSION AND/OR SEDIMENT POLLUTION, THE OPERATOR SHALL IMPLEMENT APPROPRIATE BEST MANAGEMENT PRACTICES TO ELIMINATE THE POTENTIAL FOR ACCELERATED EROSION AND/OR SEDIMENT POLLUTION.

6) ALL PUMPING OF SEDIMENT LADEN WATER SHALL BE THROUGH A SEDIMENT CONTROL BMP (BEST MANAGEMENT PRACTICE), SUCH AS A PUMPED WATER FILTER BAG, DISCHARGING OVER NON-DISTURBED WELL VEGETATED AREAS.

7) ONLY LIMITED DISTURBANCE WILL BE PERMITTED TO PROVIDE ACCESS TO SEDIMENTATION BASIN & FILTER FENCE FOR GRADING AND ACQUIRING BORROW TO CONSTRUCT THOSE BMPS.

8) EROSION AND SEDIMENT BMP'S MUST BE CONSTRUCTED, STABILIZED, AND FUNCTIONAL BEFORE SITE DISTURBANCE BEGINS WITHIN THE TRIBUTARY AREAS OF THOSE BMP'S.

9) AFTER FINAL SITE STABILIZATION HAS BEEN ACHIEVED, TEMPORARY EROSION AND SEDIMENT BMP'S, FILTER FENCE & ROCK CONSTRUCTION ENTRANCE MUST BE REMOVED. AREAS DISTURBED DURING REMOVAL OF THE BMP'S MUST BE STABILIZED IMMEDIATELY.

10) ALL EARTH DISTURBANCE ACTIVITIES SHALL PROCEED IN ACCORDANCE WITH THE FOLLOWING SEQUENCE OF CONSTRUCTION. EACH STAGE SHALL BE COMPLETED BEFORE ANY FOLLOWING STAGE IS INITIATED. CLEARING AND GRUBBING SHALL BE LIMITED ONLY TO THOSE AREAS DESCRIBED IN EACH STAGE.

11) UPON INSTALLATION OF THE TEMPORARY SEDIMENT BASIN RISER(S), AN IMMEDIATE INSPECTION OF THE RISER(S) SHALL BE CONDUCTED BY A QUALIFIED SITE REPRESENTATIVE AND MONROE COUNTY CONSERVATION DISTRICT SHALL BE NOTIFIED IN WRITING THAT RISER IS SEALED.

12) UPON COMPLETION OR TEMPORARY CESSATION OF AN EARTH DISTURBANCE, OR ANY STAGE OR PHASE THEREOF, THE PROJECT SITE SHALL BE IMMEDIATELY STABILIZED.

13) SEDIMENT BASINS MUST BE PROTECTED FROM UNAUTHORIZED ACTS OF THIRD PARTIES.

14) HAY OR STRAW MULCH MUST BE APPLIED AT 3.0 TONS PER ACRE.

15) ALL SLOPES STEEPER THAN 3:1 SHALL RECEIVE EROSION CONTROL NETTING OR BLANKETS OVER SEED AND MULCH.

16) STRAW MULCH SHALL BE APPLIED IN LONG STRANDS, NOT CHOPPED OR FINELY BROKEN.

17) UNTIL THE SITE IS STABILIZED, ALL EROSION AND SEDIMENT BMPS MUST BE MAINTAINED PROPERLY. MAINTENANCE MUST INCLUDE INSPECTION OF ALL EROSION AND SEDIMENT CONTROL BMPS AFTER EACH RUNOFF EVENT AND AT LEAST ON A WEEKLY BASIS. ALL PREVENTATIVE AND REMEDIAL MAINTENANCE WORK, INCLUDING CLEAN OUT, REPAIR, REPLACEMENT, REGRADING, RESEEDING, REMULCHING, AND RENETTING, MUST BE PERFORMED IMMEDIATELY. IF EROSION AND SEDIMENT CONTROL BMPS FAIL TO PERFORM AS EXPECTED, REPLACEMENT BMPS, OR MODIFICATIONS OF THOSE INSTALLED WILL BE REQUIRED. CONTACT MONROE COUNTY CONSERVATION DISTRICT AND THE SITE ENGINEER FOR GUIDANCE.

18) AN AREA SHALL BE CONSIDERED FINAL STABILIZED WHEN IT HAS A MINIMUM UNIFORM 70% PERENNIAL VEGETATIVE COVER OR OTHER PERMANENT NON-VEGETATIVE COVER WITH A DENSITY SUFFICIENT TO RESIST ACCELERATED SURFACE EROSION AND SUBSURFACE CHARACTERISTICS SUFFICIENT TO RESIST SLIDING AND OTHER MOVEMENTS.

NPDES PERMITTED SITE PLANS:

19) AT LEAST 7 DAYS PRIOR TO INITIATING ANY EARTH DISTURBANCE ACTIVITY, THE OPERATOR SHALL INVITE ALL CONTRACTORS INVOLVED IN THOSE ACTIVITIES, THE LANDOWNER, ALL APPROPRIATE MUNICIPAL OFFICIALS, THE EROSION AND SEDIMENT CONTROL PLAN PREPARER, AND THE MONROE COUNTY CONSERVATION DISTRICT TO AN ON-SITE MEETING.

20) BEFORE INITIATING ANY REVISIONS TO THE APPROVED EROSION AND SEDIMENT CONTROL PLAN, OR REVISIONS TO OTHER PLANS WHICH MAY AFFECT THE EFFECTIVENESS OF THE APPROVED E&S CONTROL PLAN, THE OPERATOR MUST RECEIVE APPROVAL OF THE REVISIONS FROM THE MONROE COUNTY CONSERVATION DISTRICT.

21) THE OPERATOR SHALL REMOVE FROM THE SITE, RECYCLE, OR DISPOSE OF ALL BUILDING MATERIALS AND WASTES IN ACCORDANCE WITH THE DEPARTMENT'S SOLID WASTE MANAGEMENT REGULATIONS AT 25 PA CODE 260.1 ET SEQ., 271.1 ET SEQ. AND 287.1 ET. SEQ. THE CONTRACTOR SHALL NOT ILLEGALLY BURY, DUMP, OR DISCHARGE ANY BUILDING MATERIAL OR WASTES AT THE SITE.

22) UNTIL THE SITE ACHIEVES FINAL STABILIZATION, THE OPERATOR SHALL ASSURE THAT THE BEST MANAGEMENT PRACTICES ARE IMPLEMENTED, OPERATED, AND MAINTAINED PROPERLY AND COMPLETELY. MAINTENANCE SHALL INCLUDE INSPECTIONS OF ALL BEST MANAGEMENT PRACTICE FACILITIES. COMPLETE INSPECTION LOGS SHALL BE MADE AVAILABLE TO MONROE COUNTY CONSERVATION DISTRICT SITE INSPECTORS UPON REQUEST. AL MAINTENANCE WORK, INCLUDING CLEANING, REPAIR, REPLACEMENT, REGRADING, AND STABILIZATION SHALL BE PERFORMED IMMEDIATELY.

SEEDING:

FOR TEMPORARY CONTROL MEASURES:

SEED FORMULA: (PENNDOT FORMULA E)
100% ANNUAL RYEGRASS

1. APPLY FORMULA E SEED @ 10 LBS. PER 1000 SQ. YARDS.
2. SEEDING TO BE PERFORMED BETWEEN MARCH 15 AND OCTOBER 15.
3. APPLY HAY OR STRAW MULCH AT 3 TONS PER ACRE MINIMUM.

(NOTE: LIMESTONE AND FERTILIZER MUST BE APPLIED PRIOR TO FINAL SEEDING MEASURES.)

WETLAND SEEDING MIX FOR WETLAND RESTORATION

OBL-FACW PERENNIAL FOOD & COVER WETLAND MIX: ERNMX-120

PERCENT OF MIXTURE	SCIENTIFIC NAME	COMMON NAME	WETLAND INDICATOR
20	ELYMUS VIRGINICUS	VIRGINIA WILD RYE	FACW-
15	CAREX VULPINOIDEA	FOX SEDGE	OBL
10	JUNCUS EFFUSUS	SOFT RUSH	FACW
8	SPARGANIUM EURYCARPUM	GIANT BUR-REED	OBL
8	VERBENA HASTATA	BLUE VERVAIN	FACW+
6	SCIRPUS CYPERINUS	WOOLGRASS	FACW
5	ASTER NOVAE-ANGLIAE	NEW ENGLAND ASTER	FAC
5	GLYCERIA GRANDIS	AMERICAN MANNAGRASS	NI
5	GLYCERIA STRATA	FOWL MANNAGRASS	OBL
4	SCIRPUS ATROVIRENS	GREEN BULRUSH	OBL
3.5	CAREX COMOSA	COSMOS SEDGE (BRISTLY)	OBL
3.5	CAREX LURIDA	LURID SEDGE	OBL
2	CAREX LUPULINA	HOP SEDGE	OBL
2	CAREX GYNANDRA	NODDING SEDGE	OBL
2	GLYCERIA CANADENSIS	RATTLESNAKE GRASS	OBL
1	BROMUS ALTISSIMA	WILD BROMEGRASS	NI

*SEED AT 15 BULK POUNDS PER ACRE

Borton Lawson
ENGINEERING
ARCHITECTURE
www.borton-lawson.com

Northeast Pennsylvania
613 Baltimore Drive
Suite 300
Wilkes-Barre, PA. 18702
Voice: 570-821-1999
Fax: 570-821-1990

Lehigh Valley
3893 Adler Place
Suite 100
Bethlehem, PA. 18017
Voice: 484-821-0470
Fax: 484-821-0474

REVISIONS

DATE: 11/6/09 | DR.BY: JDR/AI2
SCALE: AS SHOWN | CH.BY:

E & S NOTES

TEEGARDEN PARK
TREDYFRIN TOWNSHIP, CHESTER COUNTY, PENNSYLVANIA

PROJECT NO. 2007-2196-00
DRAWING NO. C903

APPENDIX C

Devon Park Drive Streetscape Conceptual Design

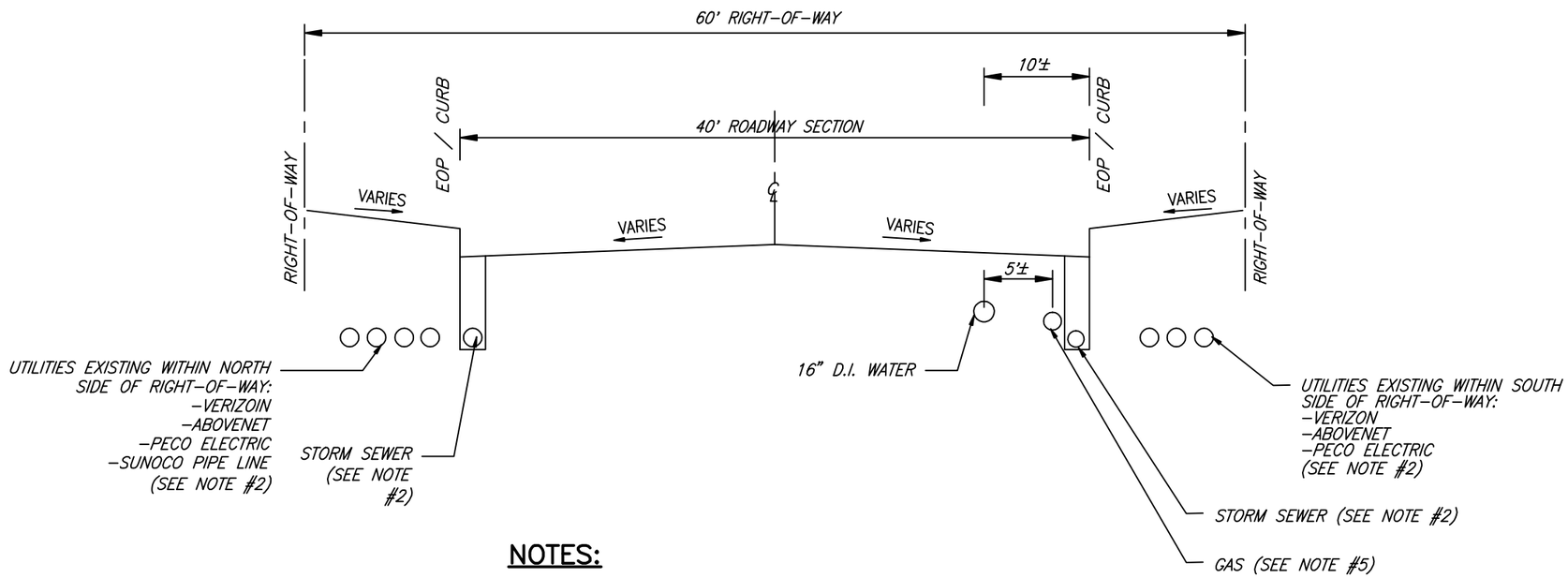

NOTES:

1. INFORMATION PRESENTED IS BASED ON MAPPING OBTAINED BY UTILITY COMPANIES AND DOES NOT REPRESENT ANY SURVEY OF SAID UTILITIES.

2. VERIZON, ABOVENET, PECO ELECTRIC, AND STORM SEWER UTILITIES CROSS THROUGH THE ROAD AT VARIOUS POINTS ON DEVON PARK DRIVE. CROSSING LOCATIONS ARE NOT SHOWN.

3. SANITARY SEWER CROSSES DEVON PARK DRIVE NEAR 400 DEVON PARK DRIVE (MAGITTI BUILDING).

4. DEPTHS OF UTILITIES ARE NOT KNOWN.

5. GAS IS LOCATED IN THE VICINITY OF THE MERCK BUILDING.

TYPICAL EXISTING DEVON PARK DRIVE CROSS-SECTION DETAIL

NOT TO SCALE

TROUT CREEK

DEVON PARK DRIVE
EXISTING CONDITIONS
STORMWATER BMP
RETROFIT ASSESSMENT

TREDYFFRIN TOWNSHIP CHESTER COUNTY, PA.

Borton Lawson
ENGINEERING
ARCHITECTURE

www.borton-lawson.com

Northeast Pennsylvania
613 Baltimore Drive
Suite 300
Wilkes-Barre, PA. 18702-7903
Voice: 570-821-1999
Fax: 570-821-1990

Lehigh Valley
3893 Adler Place
Suite 100
Bethlehem, PA. 18017
Voice: 484-821-0470
Fax: 484-821-0474

PROJECT NO. 2007-2196-00
DR.BY: TCB
CH.BY: DEW
DATE: 11/11/09
SCALE: NONE

DRAWING NO.
1

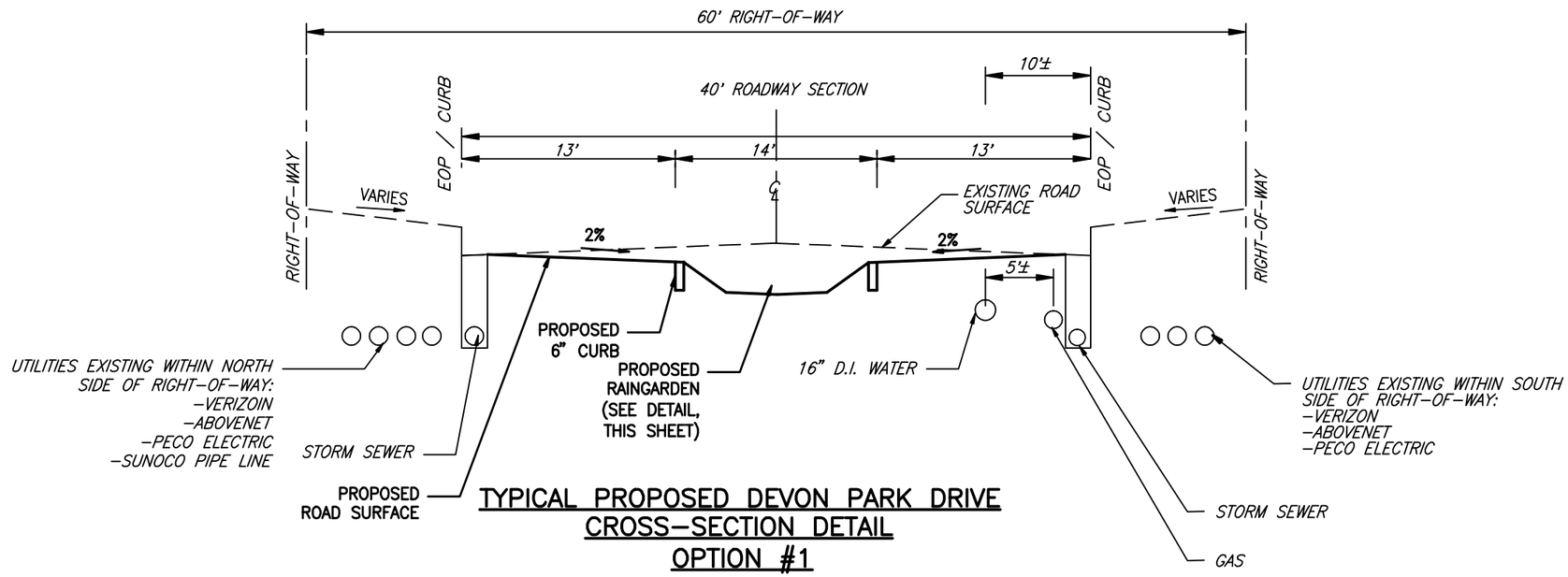

TYPICAL PROPOSED DEVON PARK DRIVE CROSS-SECTION DETAIL OPTION #1

NOT TO SCALE

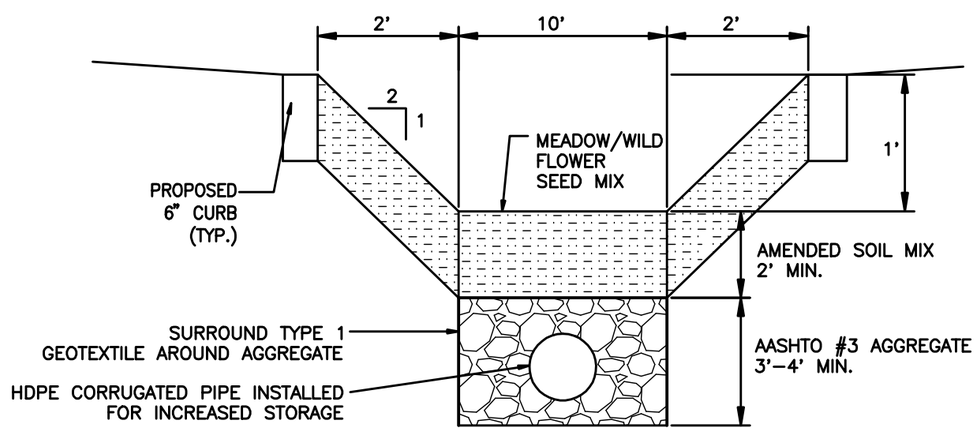

RAINGARDEN-TYPICAL CROSS SECTION

NOT TO SCALE

ADVANTAGES:

1) EXISTING UTILITY INFRASTRUCTURE IS LIMITED IN THE PROPOSED RAINGARDEN AREA.

2) THE EXISTING PAVEMENT WIDTH OF DEVON PARK DRIVE IS REDUCED FROM 40' TO 26' FEET IN WIDTH.

DISADVANTAGES:

1) INFILTRATION POTENTIAL IS LIMITED BY PROPOSED RAINGARDEN BEING LOCATED ON EXISTING, COMPACTED IMPERVIOUS SURFACE.

2) REGRADING OF ROADWAY WILL REQUIRE FULL RECONSTRUCTION OF ENTIRE WIDTH OF DEVON PARK DRIVE.

3) PROPOSED RAINGARDEN WILL BE LIMITED BY CONFLICTS WITH EXISTING UTILITIES AND DRIVEWAYS.

4) DEPTHS OF EXISTING UTILITIES MAY LIMIT ROADWAY RECONSTRUCTION.

5) REGRADING OF ROADWAY WILL REDIRECT RUNOFF AWAY FROM EXISTING INLETS.

TROUT CREEK

DEVON PARK DRIVE
STORMWATER BMP
RETROFIT ASSESSMENT
OPTION #1

TREDYFFRIN TOWNSHIP CHESTER COUNTY, PA.

Borton Lawson
ENGINEERING
ARCHITECTURE

www.borton-lawson.com

Northeast Pennsylvania
613 Baltimore Drive
Suite 300
Wilkes-Barre, PA. 18702-7903
Voice: 570-821-1999
Fax: 570-821-1990

Lehigh Valley
3893 Adler Place
Suite 100
Bethlehem, PA. 18017
Voice: 484-821-0470
Fax: 484-821-0474

PROJECT NO. 2007-2196-00
DR.BY: TCB
DATE: 12/29/09
CH.BY: DEW
SCALE: NONE

DRAWING NO.
2

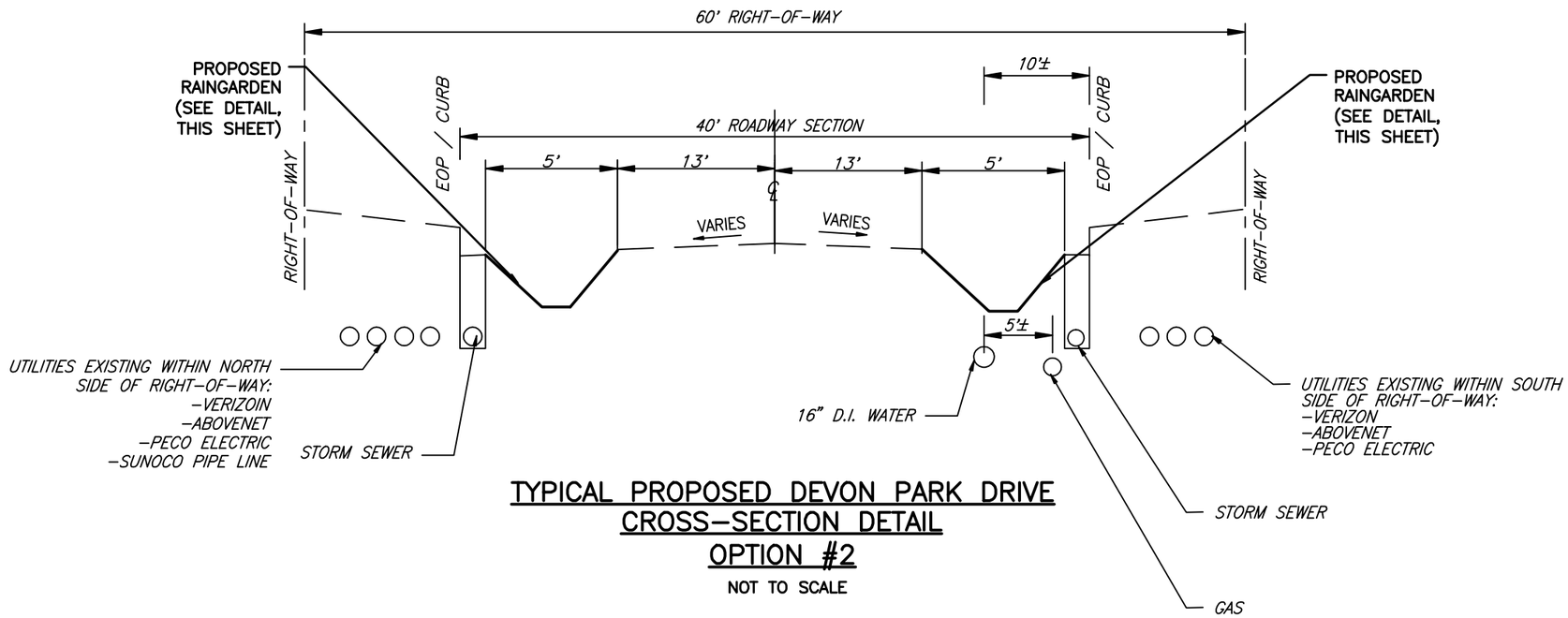

TYPICAL PROPOSED DEVON PARK DRIVE CROSS-SECTION DETAIL OPTION #2

NOT TO SCALE

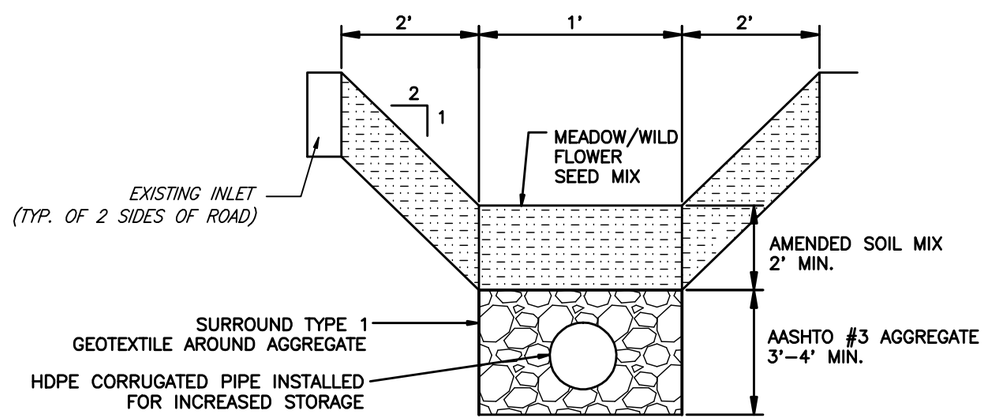

RAINGARDEN-TYPICAL CROSS SECTION

NOT TO SCALE

ADVANTAGES:

1) THE EXISTING PAVEMENT WIDTH OF DEVON PARK DRIVE IS REDUCED FROM 40' TO 26' FEET IN WIDTH.

2) RECONSTRUCTION OF DEVON PARK IS NOT REQUIRED.

DISADVANTAGES:

1) PROPOSED RAINGARDEN MAY BE LIMITED BY CONFLICTS WITH EXISTING UTILITIES LOCATED IN BOTH SHOULDERS.

2) DEPTHS OF EXISTING UTILITIES MAY LIMIT DEPTH OF FACILITY.

3) GRADING / DRAINAGE TRANSITIONS WILL BE REQUIRED AT EXISTING DRIVEWAYS TO ACCOMMODATE RAINGARDENS.

4) INFILTRATION POTENTIAL IS LIMITED BY PROPOSED RAINGARDEN BEING LOCATED ON EXISTING, COMPACTED IMPERVIOUS SURFACE.

TROUT CREEK

DEVON PARK DRIVE STORMWATER BMP RETROFIT ASSESSMENT OPTION #2

TREDYFFRIN TOWNSHIP CHESTER COUNTY, PA.

Borton Lawson
ENGINEERING ARCHITECTURE
www.borton-lawson.com
Northeast Pennsylvania
613 Baltimore Drive
Suite 300
Wilkes-Barre, PA. 18702-7903
Voice: 570-821-1999
Fax: 570-821-1990
Lehigh Valley
3893 Adler Place
Suite 100
Bethlehem, PA. 18017
Voice: 484-821-0470
Fax: 484-821-0474

PROJECT NO. 2007-2196-00

DATE: 12/29/09

DR.BY: TCB

SCALE: NONE

CH.BY: DEW

DRAWING NO.

3

DISCIPLINES

Civil Engineering

Professional Land Surveying

Environmental Engineering

Transportation Engineering

Process Automation

Mechanical Engineering

Structural Engineering

Electrical Engineering

Architecture

Construction Administration

Borton Lawson

ENGINEERING
ARCHITECTURE

IMAGINATION. DELIVERED.™